Photoelectric Sensors

- Cylindrical
- Cubic
- Forks
- Amplifiers for optical fibers
- Optical fibers

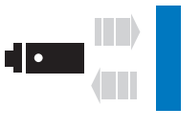

direct diffuse

reflector

beam

polarized

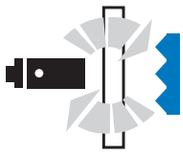

for trasparent objects

background suppression

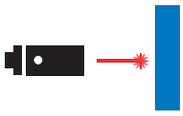

LASER direct diffuse

LASER beam

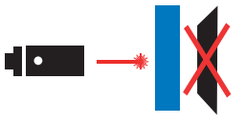

LASER background suppression

LASER polarized

fork

Photoelectric sensors
Basic theory

Photoelectric technology

A photoelectric sensor is formed by an element that emits light radiations which, directly or indirectly, reach the receiver .The level of the light signal is converted into an electrical signal amplified and elaborated to drive the output state of the sensor. A variation of the received light radiations indicates the presence or the absence of the target, or its variation in terms of: color, position, reflection. The light radiation can be visible emission or outside the visible band and it is usually modulated (emission and reception under impulsive).

There are different methods of detection:

Direct diffuse

Emitter and receiver form part of the same unit. The optical beams are parallel or slightly convergent.. The presence of a target in the optical field produces the diffuse reflection of the light beam on the receiver and the consequent detection of the target. The reflective quality of the target is essential, it is possible to detect any target unless it is perfectly reflective or ideally black. Light objects, with reflectivity at 90%, are detected near the nominal distance Sn, dark objects, with reflectivity at the 18% are generally detected at ½ Sn.

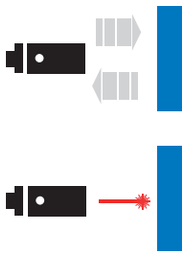

- Easy alignment
- Moderate detection distance
- Reflector is not needed

Retro-reflective

Emitter and receiver form part of the same unit. The optical beams are parallel. The emitter's luminous signal is reflected by a reflector and re-directed towards the sensor. Detection occurs when the path of the beam is interrupted by the presence of an opaque object.

- Moderate detection distances
- Easy alignment

Polarized retro-reflective

This is a variant of the retro-reflective system which eliminates its main defect consisting in the possible non-recognition of standard specular reflective surfaces facing the optical axis as they cannot be distinguished from the reflector. A polarizing filter is placed in the emitter's optical system along an axis that we will call horizontal, whilst a vertical polarizer is placed in the receiver. This results in the elimination of reflections from surfaces which are not optically active. The light reflected from the reflector possesses a component that is strongly polarized in a perpendicular direction to the incident light and therefore becomes the only recognizable reflected-light source.

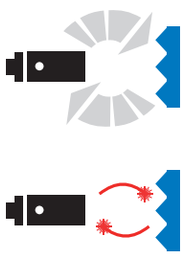

- Moderate detection distances
- Not effected by the target surface reflections
- Red emission beam, Easy alignment

Retro-reflective for transparent objetcs

This is a variant for the retro-reflective model. This model is used in those applications where the object consists of transparent glass, transparent thin films or surfaces covered with these films as they have moderate properties of distorting the polarization.

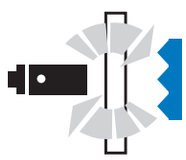

- Possibility to detect transparent objects

Focalized diffuse reflection

Emitter and receiver are built in the same unit. Their beams converge in one point where there sensitivity is at the top; outside of it the sensitivity decreases. In summary, a background and first level suppression is carried out with limited/fair efficiency.

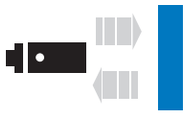

- Small influence of background beyond the target detection distance
- Reduced product complexity with respect to background suppression

Through-Beam

Emitter and Receiver are manufactured as two separate units and are installed one in front of the other. Detection occurs when the path of the beam is interrupted by the presence of an object.

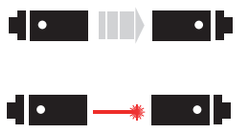

- High signal, possible to use it in “dirty” environments
- Long sensing distances (longer than Reflex and Diffuse Reflection types)
- No influence due to reflections or very reflective objects

Background suppression

Emitter and receiver are built in the same unit. The detection system is based on a triangulation principle and it is sensitive to the reflecting angle, which decreases proportional to the object distance. The emitter has a small emission angle, therefore the luminous area hitting the object is also small. The receiver optics receives the reflected light both from the near objects (target) and from the distant ones (background), then a sophisticated electronics processes the two signals in a way to enable detection both of the target and of the background. The influence of the target color is then considerably reduced. The background suppression allows the sensor to ignore a very reflective background, even if behind a darker object/target.

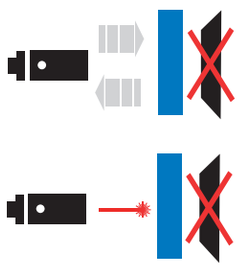

- No influence of the background beyond the detection distance of target
- No influence of the color of target to be detected at a specific distance

In addition to above mentioned modes, following special functions are also available:

• Contrast scanner: emitter and receiver are built in the same unit. The emitter can be of different colors, since they can detect two surfaces on the basis of the contrast created by the different reflection degree. In this way a dark bar taken as a reference (little reflective), can be detected by contrast on a light background (highly reflective), or viceversa. In presence of colored surfaces the contrast is increased by the emission Led.

•Luminescence scanner: emitter and receiver are built in the same unit. For luminescence scanners the property of fluorescent material is used that absorbs energy from the ultraviolet light emitted by the sensor; this light is then reflected by the fluorescent surface with a greater wave length, thus entering the visible light spectrum. The emission of ultraviolet light is obtained by means of special emitter leds.

• Color sensor: emitter and receiver are built in the same unit. The color of an enlightened target depends on the color components of light hitting it, which are reflected, after deducting the absorbed ones. It can be shown that every single color can be dispersed proportionally to the three base colors: red, green and blue. The sensor uses the RGB principle for sensing, that is it emits three base colors (Red, Green, Blue) and measures the intensity of each component in order to obtain accurate sensing of a wide range of colors. In practice in order to make the sensor recognize a color , it is enough to place the color under the sensing head and take advantage of the self learning/reading functions.

M.D. Micro Detectors Photoelectric Sensors

M.D. Micro Detectors Photoelectric Sensors portfolio includes cylindrical sensors from M8 to M18 diameters as well as cubic sensors both MINI and MAXI size. In addition to above different models depending on the functions described, following products for special applications are also available:

- with AISI316L stainless steel housing and IP69K protection degree suitable for applications in food & beverage and pharmaceutical industry
- with DECOUT (NPN/PNP,NO/NC) output to fit any connection need as well as for series and parallel connections
- with laser emission (classe1), necessary either to detect very small objects or to reach great distances
- with AC supply 24-230 Vac o 24-230 Vdc
- sensors with separate amplier unit

Industries and Applications

Thanks to the wide range of models and shapes available (Direct Diffuse, Reflex, Polarized Retro Reflective …), Photoelectric Sensors can be used in all industrial automation fields:

- conveyor lines
- packaging lines
- ceramic and wood industry
- automated warehouses

Customization

In addition to standard products, MD is available to realize customized products according to specific customers' application requirements:

- cable versions with different cable length than standard ones;
- specific labeling;
- cable versions with specific plugs;
- models with different performances than the catalogue ones (sensing distances, working frequencies, …)

notes

Cylindrical Photoelectric Sensor

H8 series

M8 high frequency DC
H8 series

features

- **Very small dimensions: M8 housing**
- **High switching frequency: 50 kHz**
- **Completely amplified**
- **IP67 protection degree**
- **Strong stainless steel housing**
- **Approvals: CE**

web contents

- **Application notes**
- **Photos**
- **Catalogue / Manuals**

code description

H8 E / 1

series	H8	M8 miniaturized through-beam
function	E	Emitter
	R	Receiver
version	1	Standard version

available models

model	housing	distance (mm)	exit	note	model
emitter	stainless steel	80	cable	5 Vdc - 25 mA	H8E/1
receiver				Imax = 50 mA Pmax = 250 mW	H8R/1

technical specification

through-beam models

	H8
	
nominal sensing distance	80 mm
emission	infrared (880 nm)
minimum detectable object	-
repeatability	-
supply voltage	5 Vdc (E1), 30 Vdc max R1
ripple	≤ 1 %
no-load supply current	25 mA (E1)
load current (nominal)	≥ 2,5 mA
load current (maximum)	≤ 50 mA, 250 mW
leakage current	-
voltage drop	≤ 0.2 V @ 2.5 mA
output type	open collector
switching frequency	50 kHz
power on delay	-
power supply protections	-
EMC	in conformity with the EMC Directive according to EN 60947-5-2
output protection	-
operating temperature range	- 25°C...+ 70°C (without freeze)
external light interference	150 lux (incandescent lamp)
protection degree	IP67 (EN60529)
LEDs	-
housing materials	stainless steel
optic materials	plastic
weight	63 g

electrical diagrams of the connections

H8E/1 emitter	H8R/1 receiver
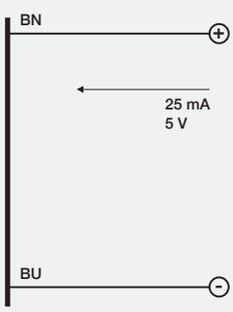	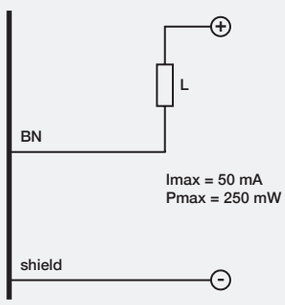

BN	brown
BU	blue
BK	black
WH	white
PK	pink
GY	gray

response diagram

H8E/1, H8R/1 excess gain

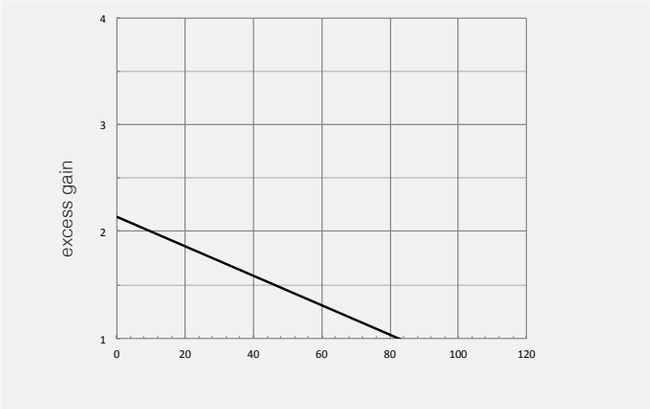

H8E/1, H8R/1 spot dimension

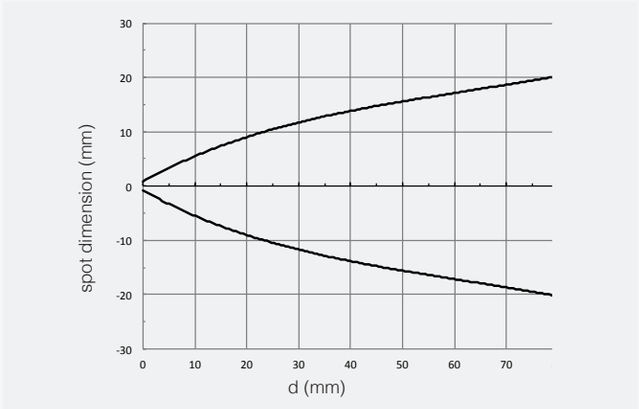

H8E/1, H8R/1 parallel displacement

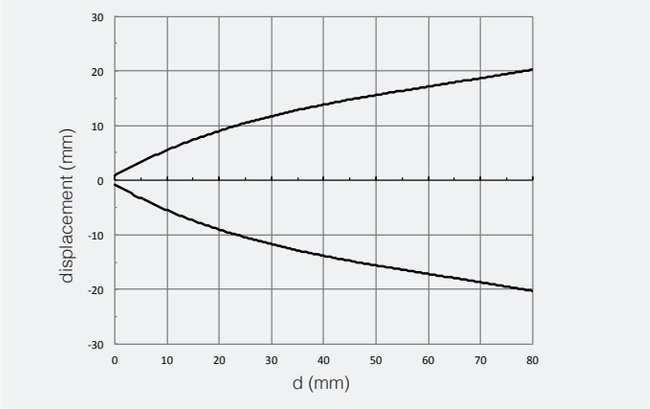

dimensions (mm)

H8*/**

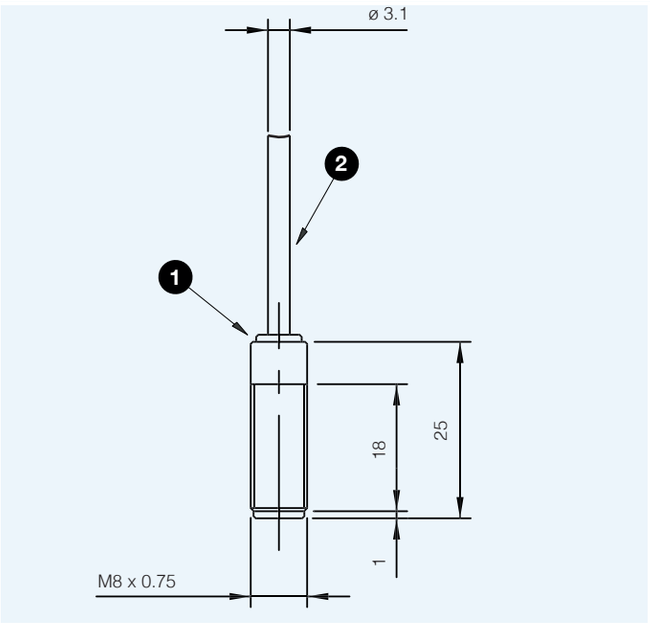

1 axial cable exit

2 Ø 3.1 mm, PVC, 2 m

dimensions (mm)

accessories included in all metallic models

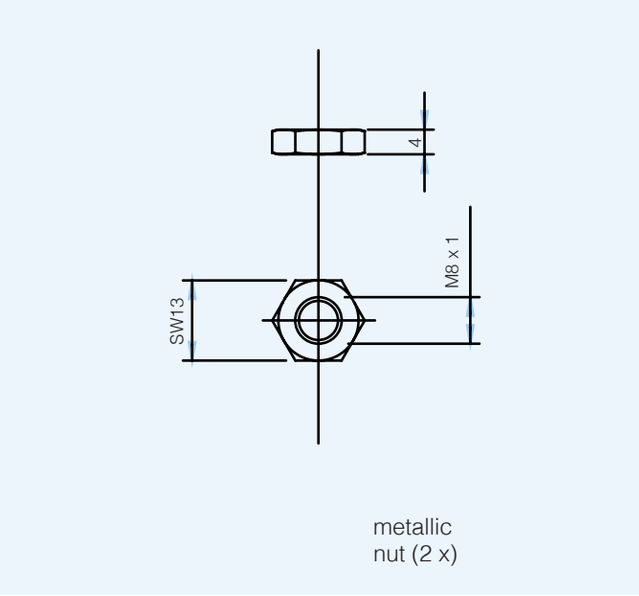

notes

HE series

M8 miniaturized through-beam sensors DC HE series

features

- **M8 through beam models with high switching frequency**
- **LED status indicator for all models**
- **Complete protection against electrical damages**
- **IP67 protection degree**
- **Stainless steel housing**
- **Supply voltage 10...30 Vdc**
- **Approvals: CE**

web contents

- **Application notes**
- **Photos**
- **Catalogue / Manuals**

code description

HE E / 0 0 - 3 A

series	HE	M8 high switching frequency through beam sensors
output	E	Emitter
	R	Receiver
output state	0	Emitter
	A	NO output receiver
	C	NC output receiver
output logic	0	Emitter
	P	PNP receiver
	N	NPN receiver
distance	3	Models with 10 kHz, 1 m sensing distance
	4	Models with 1 kHz, 2 m sensing distance
connect.	A	Cable exit 2 m
	F	M8 plug cable exit

available models

model	distance (m)	switching frequency (kHz)	exit	PNP NO	NPN NO	PNP NC	NPN NC
emitter	1	10	cable	HEE/00-3A			
			M8	HEE/00-3F			
receiver			cable	HER/AP-3A	HER/AN-3A	HER/CP-3A	HER/CN-3A
			M8	HER/AP-3F	HER/AN-3F	HER/CP-3F	HER/CN-3F
emitter	2	1	cable	HEE/00-4A			
			M8	HEE/00-4F			
receiver			cable	HER/AP-4A	HER/AN-4A	HER/CP-4A	HER/CN-4A
			M8	HER/AP-4F	HER/AN-4F	HER/CP-4F	HER/CN-4F

technical specification

through-beam models

	HEE/**-3*	HER/**-3*	HEE/**-4*	HER/**-4*
				
nominal sensing distance Sn	1 m (EG = 2)		2 m (EG = 2)	
emission	infrared (880 nm)	-	infrared (880 nm)	-
hysteresis	≤ 10 %			
repeatability	10 %			
operating voltage	10...30 Vdc, 30 Vdc max			
ripple	≤ 10 %			
no-load supply current	≤ 45 mA			
load current	≤ 100 mA			
leakage current	10 µA			
output voltage drop	≤ 2 V			
output type	-	NPN or PNP NO or NC	-	NPN or PNP NO or NC
switching frequency	10 kHz		1 kHz	
power on delay	-	≤ 100 ms	-	≤ 100 ms
power supply protections	polarity reversal, impulsive overvoltages			
EMC	in conformity with the EMC Directive according to EN 60947-5-2			
output protection	short circuit (autoreset)			
temperature range	- 25°C...+ 50°C			
temperature drift	≤ 10 %			
external light interference	3,000 lux (incandescent lamp), 5,000 lux (sunlight)			
protection degree	IP67 (EN60529) [1]			
LEDs	yellow (supply)	yellow (output active)	yellow (supply)	yellow (output active)
housing material	stainless steel			
optic material	plastic			
weight	15 g connector / 40 g cable			

[1] Protection guaranteed only with plug cable well mounted

electrical diagrams of the connections

HER/00-**	HER/*P-**	HER/*N-**

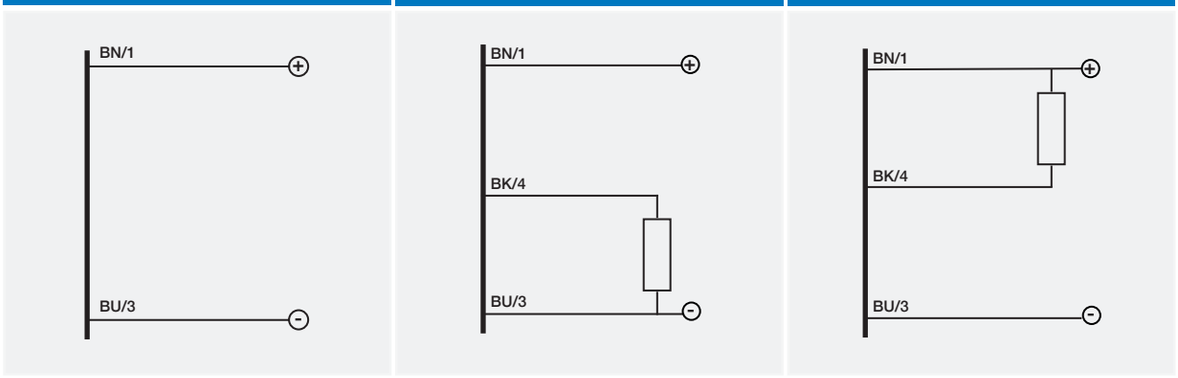

BN	brown
BU	blue
BK	balck
WH	white
PK	pink
GY	gray

plug

M8

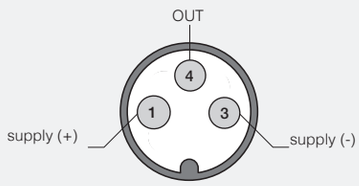

response diagram

HE*/**-3 excess gain	HE*/**-3 spot dimension

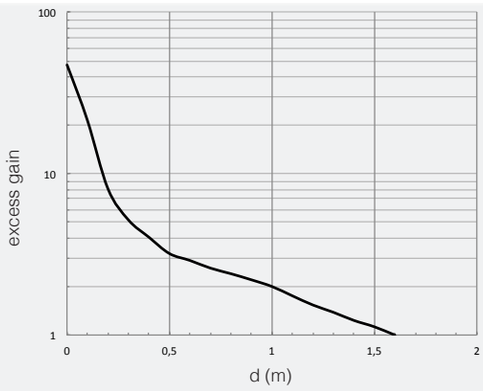

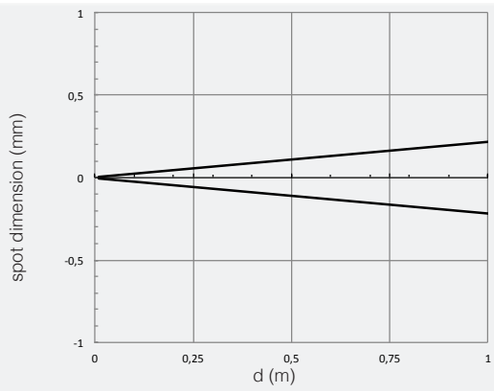

response diagram

HE*/-3 mutual interference**

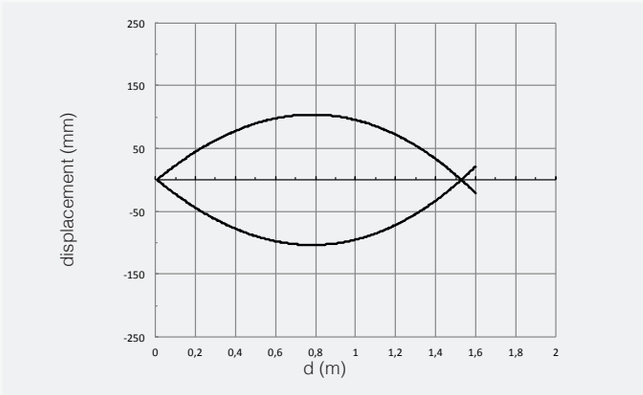

HE*/-4 excess gain**

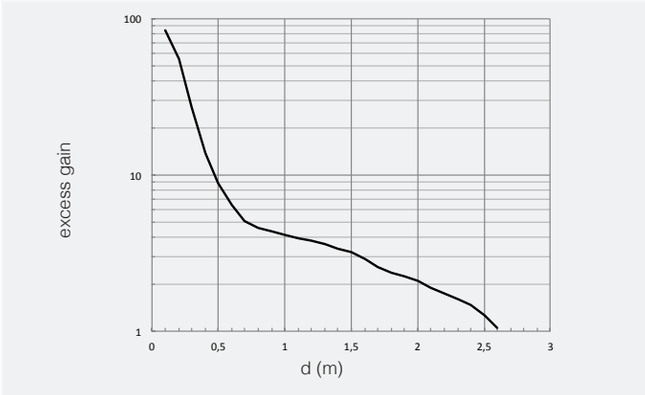

HE*/-4 spot dimension**

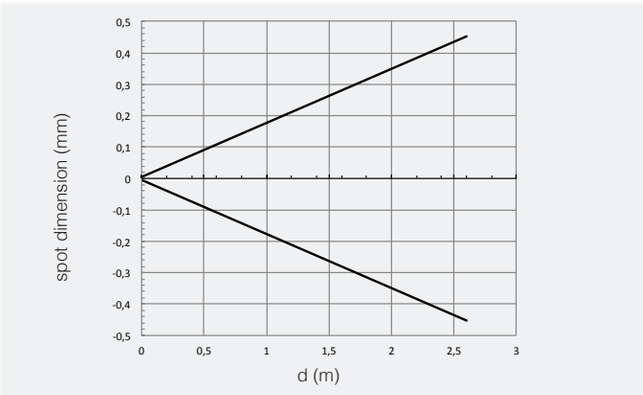

HE*/-4 parallel displacement**

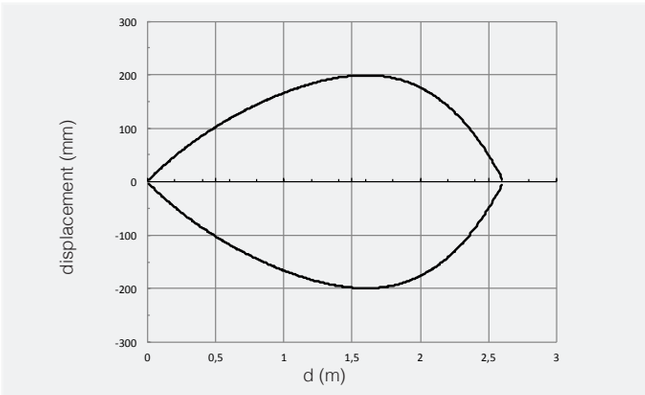

dimensions (mm)

HE*/-*F**

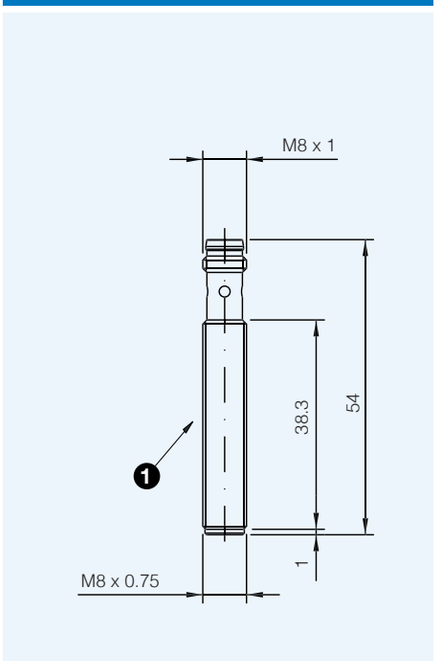

HE*/-*A**

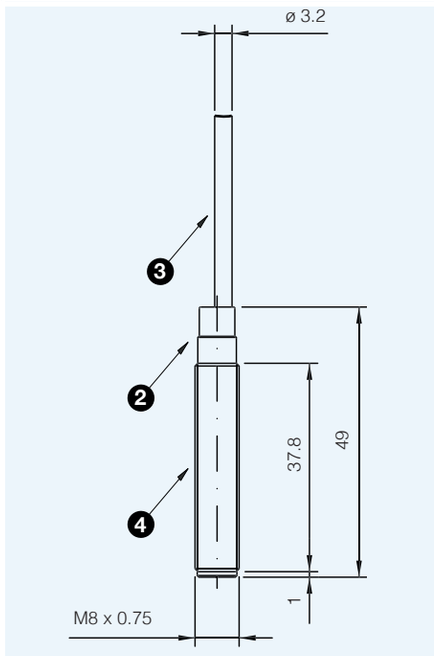

1 cylindrical threaded housing exit F

2 plastic cable exit

3 cable Ø 3,1

4 cylindrical threaded housing exit A

dimensions (mm)

accessories included

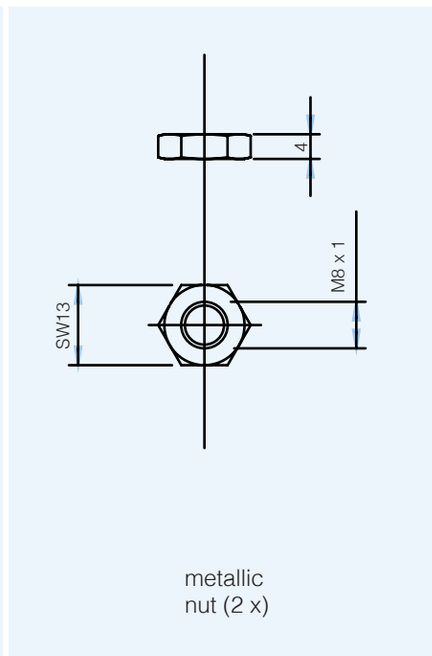

DG series

Ø 10 mm miniaturized through-beam sensors DG series

features

- **Ø 10 mm plastic housing 41 mm length**
- **Ø 13 mm hole irreversibile spring latch fixing**
- **LED status indicator receiver only**
- **Complete protection against electrical damages**
- **IP67 protection degree**
- **Nominal sensing distance (Sn): 2 m ExG. = 4**
- **Supply voltage 15...37 Vdc (10...30 Vdc for EA version)**
- **Approvals: CE**

Cylindrical Ø 10 mm

web contents

- **Application notes**
- **Photos**
- **Catalogue / Manuals**

code description

DG E / L N - 3 A

series	DG	Miniaturized photoelectric sensor DG series
emitter / receiver	E	Emitter
	R	Receiver
emitter / receiver output	1	Emitter
	L	Receiver Light ON
	D	Receiver Dark ON
function	1	Emitter
	N	NPN logic receiver
	P	PNP logic receiver
housing	3	Housing Ø 10 mm with spring latch fixing for Ø 13 mm hole
cable	A	5 m cable length
	D	7 m cable length
version	EA	Special version with 10...30 Vdc supply voltage
		Standard version

available models

model	distance (m)	supply voltage	cable (m)	PNP NO	NPN NO	PNP NC	NPN NC
emitter	-	15...37 Vdc	5	DGE/11-3A			
			7	DGE/11-3D			
		10...30 Vdc	5	DGE/11-3AEA			
			7	DGE/11-3DEA			
receiver	2	15...37 Vdc	5	DGR/DP-3A	DGR/LP-3A	DGR/DN-3A	DGR/LN-3A
			7	DGR/DP-3D	DGR/LP-3D	DGR/DN-3D	DGR/LN-3D
		10...30 Vdc	5	DGR/DP-3AEA	-	-	-
			7	DGR/DP-3DEA	-	-	-

technical specification

through-beam models

	DGE/11-**	DGR/**-**	DG*/**-**EA
nominal sensing distance	2 m (EG = 4)		
emission	infrared (880 nm)	-	-
supply operating voltage	15...37 Vdc		10...30 Vdc
ripple	10 %		
no-load supply current	≤ 10 mA		
load output current	-	30 mA	
leakage current	-	10 µA	
output voltage drop	-	2 V with = 30 mA	
output type	-	NPN or PNP LO or DO	
switching frequency	-	40 Hz	
power on delay	-	100 ms	
power supply protections	polarity reversal, pulse overvoltage		
EMC	in conformity with the EMC Directive according to EN 60947-5-2		
output protection	-	short circuit	
operating temperature range	- 25°C...+ 70°C		
temperature drift	≤ 10 %		
protection degree	IP67 (EN60529) [1]		
external light interference	-	20,000 lux	
LEDs	supply	output status	
housing material	PC		

[1] Protection guaranteed only with plug cable well mounted

electrical diagrams of the connections

emitter	receiver PNP	receiver NPN
	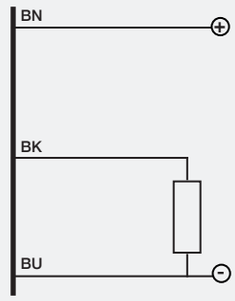	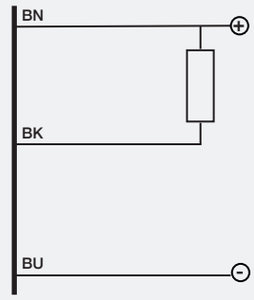

BN	brown
BU	blue
BK	black
WH	white
PK	pink
GY	gray

response diagram

DGE/-**, DGR/**-** excess gain**

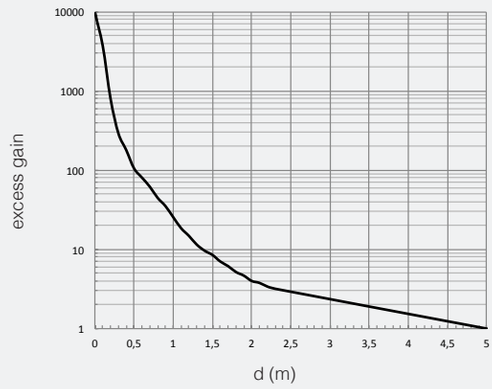

DGE/-**, DGR/**-** spot dimension**

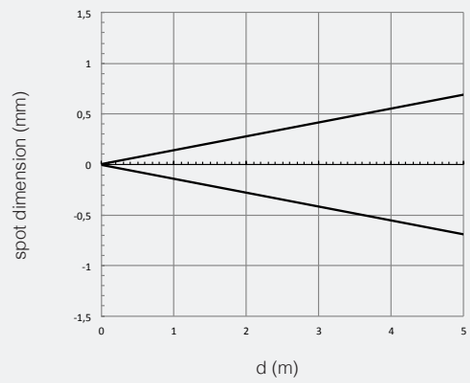

DGE/-**, DGR/**-** parallel displacement**

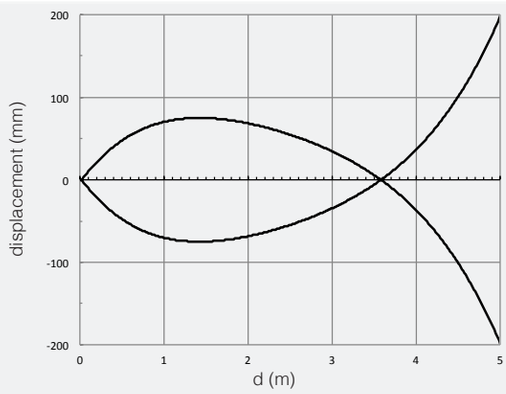

dimensions (mm)

DG*/-***

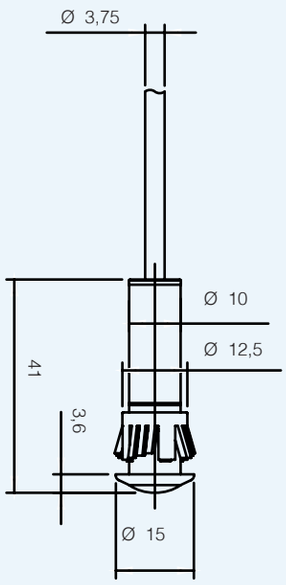

DM series

M12 cylindrical photoelectric sensors

features

- **Models diffuse reflection, polarized and through-beam**
- **Local and remote teach-in function**
- **Light-on / Dark-on selectable outputs**
- **IP67 protection degree**
- **Multifunction LED status indicator**
- **Complete protection against electrical damages**
- **Approvals: CE and cULus listed**

web contents

- **Application notes**
- **Photos**
- **Catalogue / Manuals**

code description (*)

DM 2 / 0 N - 1 A

series	DM	M12 cylindrical photoelectric sensor
type	2	Diffuse reflection 100 mm without sensitivity adjustment
	3	Diffuse reflection 100 mm with sensitivity adjustment
	7	Diffuse reflection 300 mm with sensitivity adjustment
	P	Polarized 2 m with sensitivity adjustment
	E	Emitter 4 m with power emission adjustment
	R	Receiver 4 m
emitter / receiver	0	Emitter without check - Receiver LO/DO selectable
	X	Emitter with check
function	0	Emitter
	N	NPN output
	P	PNP output
housing	1	Metal housing
cable	A	Axial cable exit
	H	M12 plug cable exit
version	25	DMP and DME without sensitivity adjustment
		Standard version

(*) ATEX models available, contact our Sales Dept. for further information.

available models

model	distance	adjustment	4 wires LO / DO NPN		4 wires LO / DO PNP	
			cable	plug	cable	plug
direct diffuse	100 mm	-	DM2/0N -1A	DM2/0N -1H	DM2/0P -1A	DM2/0P -1H
	100 mm	●	DM3/0N -1A	DM3/0N -1H	DM3/0P -1A	DM3/0P -1H
	300 mm		DM7/0N -1A	DM7/0N -1H	DM7/0P -1A	DM7/0P -1H
polarized	2 m		DMP/0N -1A	DMP/0N -1H	DMP/0P -1A	DMP/0P -1H
emitter	4 m		DME/00 -1A	DME/00 -1H	DME/00 -1A	DME/00 -1H
receiver		-	DMR/0N -1A	DMR/0N -1H	DMR/0P -1A	DMR/0P -1H

technical specification

	diffuse reflection			polarized	through-beam	
	DM2/0*-1*	DM3/0*-1*	DM7/0*-1*	DMP/0*-1*	DMR/0*-1*	DME/0*-1*
	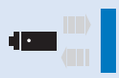					
nominal sensing distance	100 mm (1)		300 mm (2)	2.5 m (3)	4 m	
emission	infrared (880 nm)			red (660 nm)	infrared (880 nm)	
tolerance	+ 15 % / - 5 %					
hysteresis	≤ 10 %				≤ 20 %	
repeatability	5 %					
operating voltage	10...30 Vdc					
ripple	≤ 10 %					
no-load current	≤ 30 mA					
load current	100 mA					
leakage current	≤ 10 µA					
output voltage drop	2 V max. IL = 100 mA					
output type	NPN o PNP - LO / DO selectable					
switching frequency	400 Hz				250 Hz	
response time	1.1 ms				2 ms	
power on delay	150 ms					
power supply protections	polarity reversal, transient					
EMC	in conformity with the EMC Directive according to EN 60947-5-2					
output protection	short circuit (autoreset)					
temperature range	- 25°C...+ 70°C					
temperature drift	10 % Sr					
protection degree	IP67 (EN60529) (4)					
check input	-				decoupled input supply 10..30 Vdc	
external light interference	3000 lux (incandescent lamp), 10000 lux (sunlight)					
LEDs	yellow					
sensitivity adjustment	-	●			-	●
housing material	nickel-plated brass					
optic material	plastic					
tightening torque	10 Nm					
weight (approximate)	28 g connector / 60 g cable					

(1) With 100x100 mm white paper (2) With 200x200 mm white paper (3) With RL 110 reflector (4) Protection guaranteed only with plug cable well mounted

DM SERIES.

electrical diagrams of the connections

DM2/0N-** DM3/0N-** DM7/0N-**

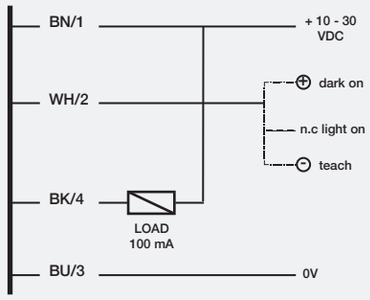

DM2/0P-** DM3/0P-** DM7/0P-**

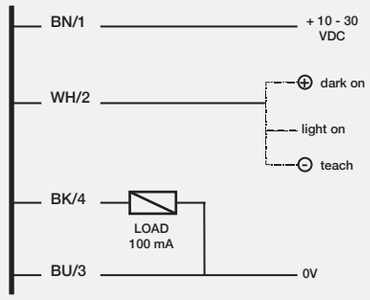

DMP/0N-**

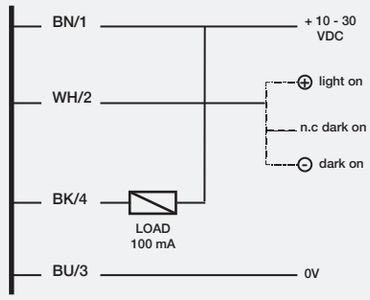

DMP/0P-**

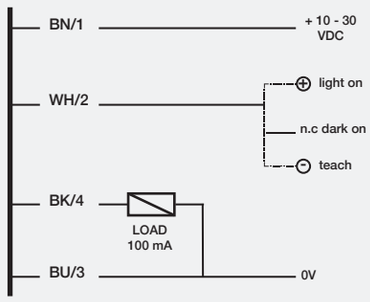

DMR/0N-1*

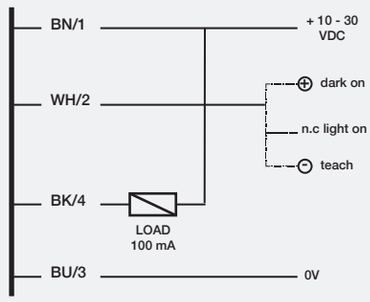

DMR/0P-1*

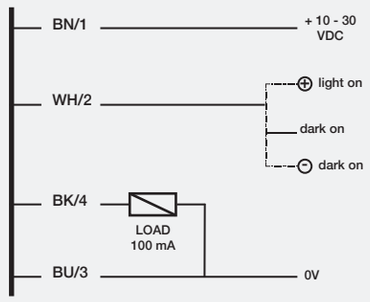

DME/X0-1*

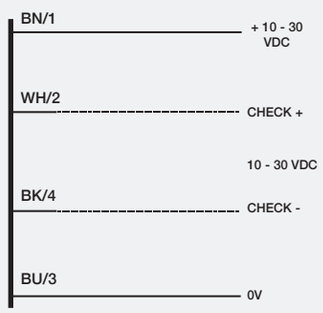

BN	brown
BU	blue
BK	black
WH	white
PK	pink
GY	gray

Notes:

Models DM2/0N-** and DM2/0P-** without sensitivity adjustment.

Models DMP/0N-**25 and DMP/0P-**25 without sensitivity adjustment.

Models DME/00-** without check.

In case of combined load, resistive and capacitive, the maximum admissible capacity (C) is 0,1 µF for maximum output voltage and current.

plug

M12 diffuse reflection polarized receiver

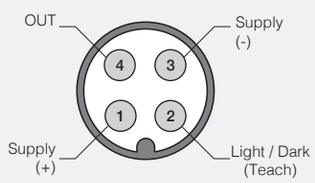

M12 emitter with check

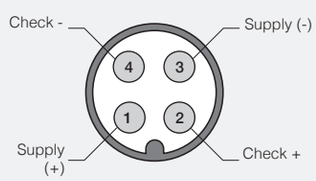

M12 emitter without check

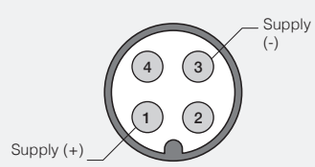

response diagrams

direct reflection models

DM2/**-** excess gain

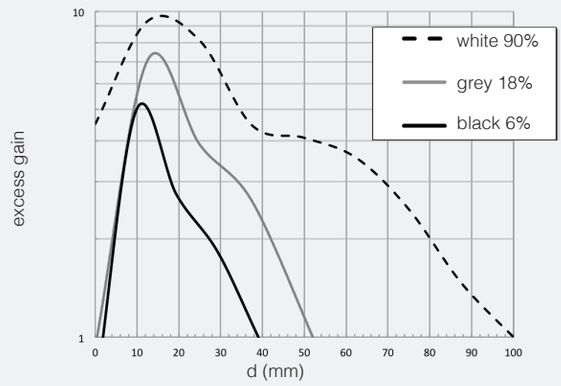

DM2/**-** spot dimension

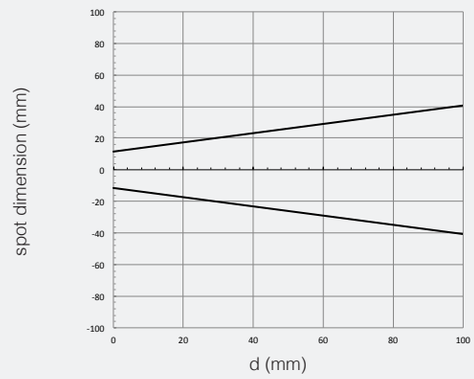

DM2/**-** parallel displacement

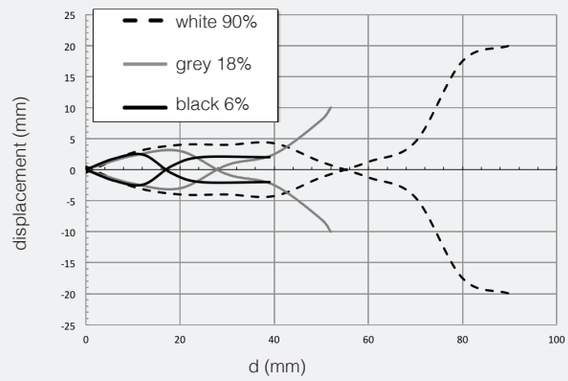

DM5/**-** excess gain

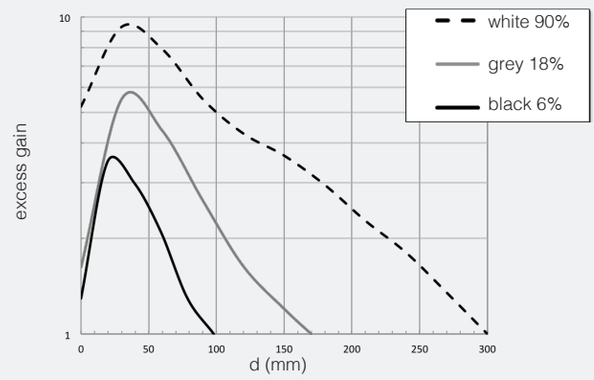

DM5/**-** spot dimension

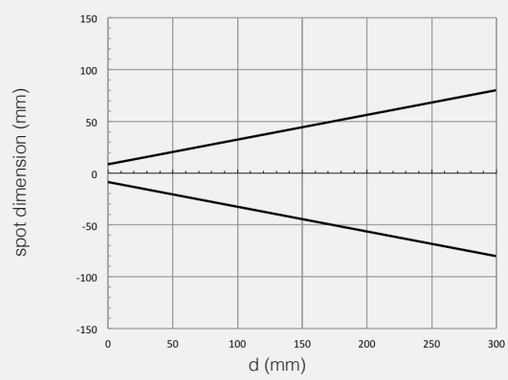

DM5/**-** parallel displacement

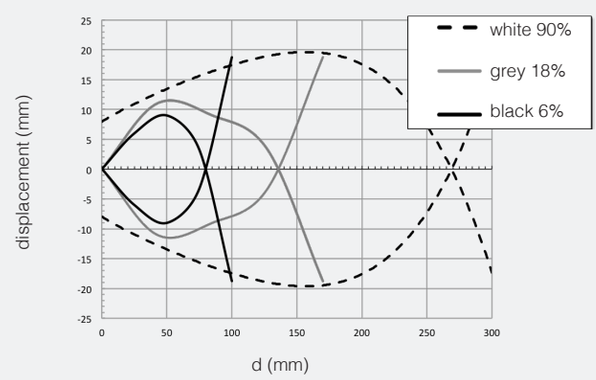

response diagrams

polarized models (diagrams calculated with RL110)

DM7/-** excess gain**

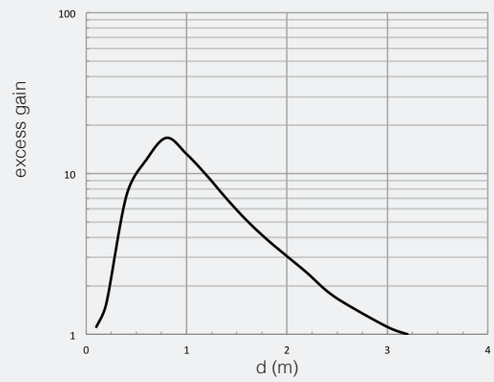

DM7/-** spot dimension**

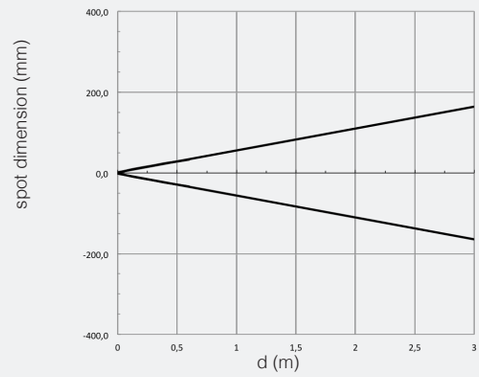

DM7/-** parallel displacement**

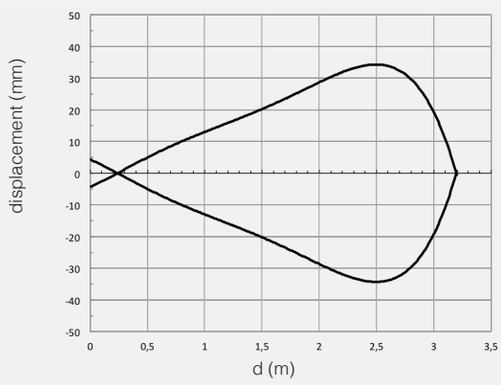

response diagrams

through-beam models

DMP/-** excess gain**

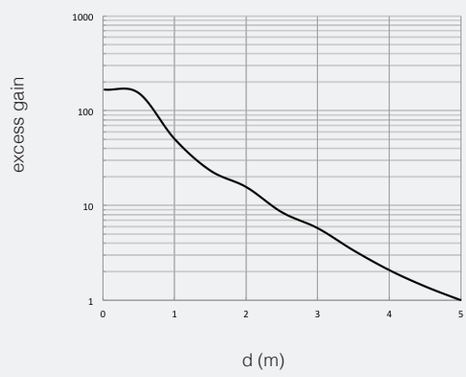

DMP/-** spot dimension**

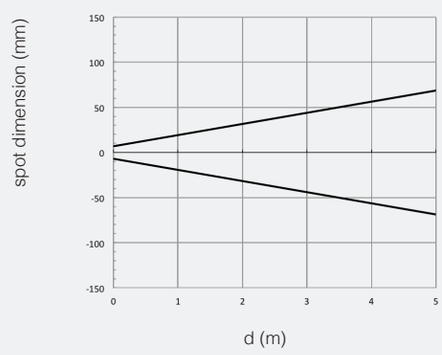

response diagrams

through-beam models

DMP/-** parallel displacement**

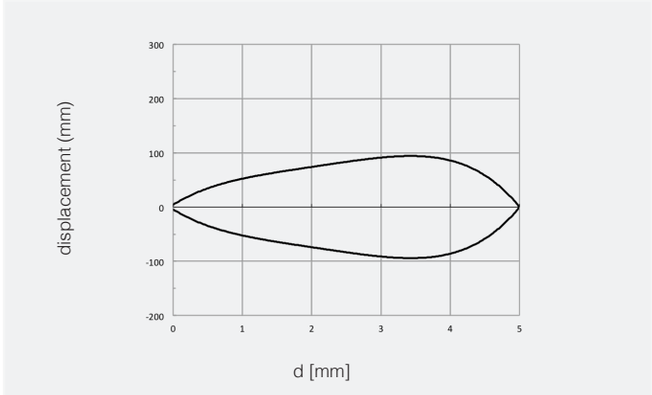

dimensions (mm)

DMP/-1A**

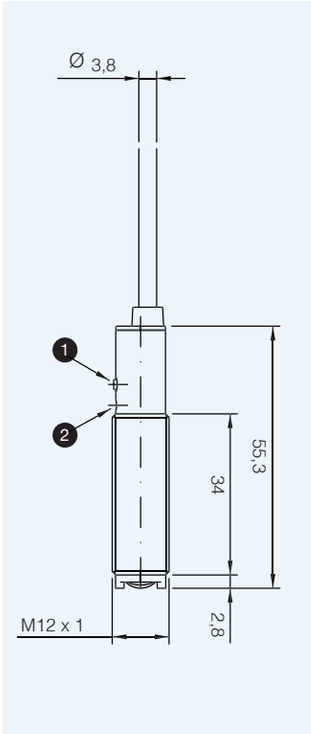

DM*/-1A**

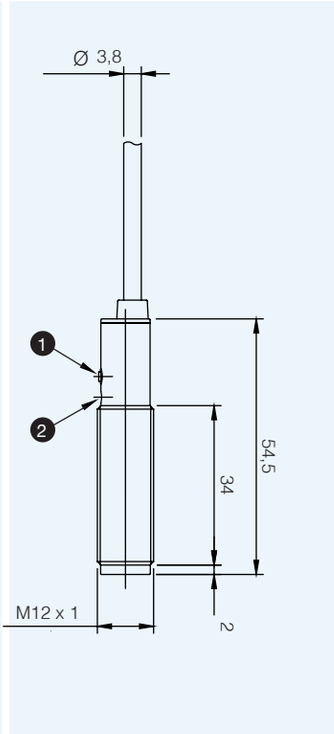

DMP/-1H**

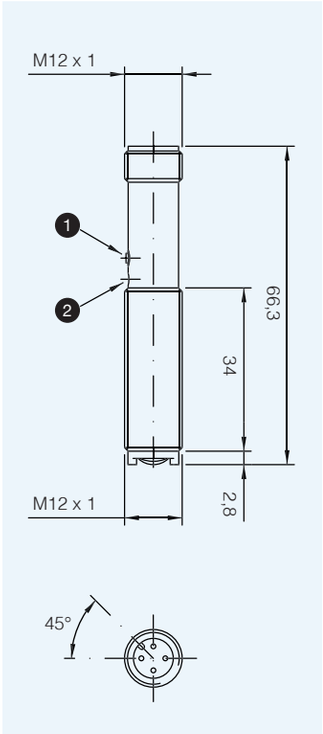

DM*/-1H**

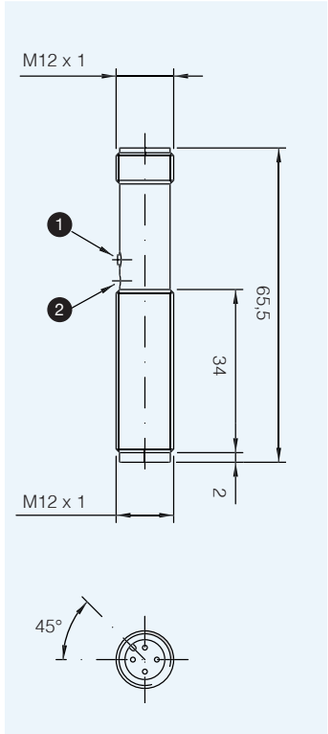

1 Teach-In button 2 LED

dimensions (mm)

accessories included

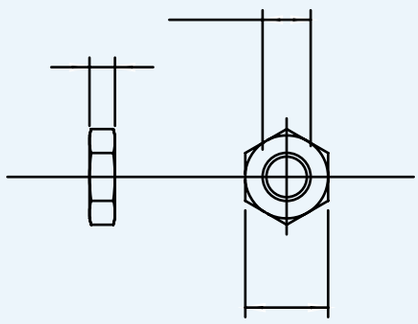

metallic
nut (2 x)

FA series

M18 photoelectric sensors DC

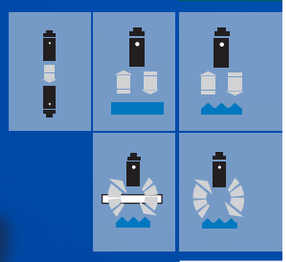

features

- Complete range of M18 sensors with 10...30 Vdc power supply
- Axial and radial optic with flat surface
- Retro-reflective models for transparent objects detection, with red emission
- IP67 protection degree
- Metallic or plastic housing
- Sensitivity adjustment available for all models
- Total protection against any type of electric damages
- Approvals: CE and cULus listed

web contents

- Application notes
- Photos
- Catalogue / Manuals

M18 cylindrical DC

code description (*)

FA I C / B P - 0 A

series	FA	M18 sensor with 4 DC wires
emission	I	Infrared invisible led emission
	R	Red visible led emission
type	2	100 mm Direct reflection without adjustment
	3	100 mm Direct reflection with adjustment
	4	200 mm Direct reflection with adjustment
	5	200 mm Direct reflection without adjustment
	6	400 mm Direct reflection without adjustment
	7	400 mm Direct reflection with adjustment
	8	Direct reflection: 1000 mm axial, 800 mm radial with adjustment
	C	Reflex without adjustment
	P	Reflex polarized without adjustment
	N	Reflex polarized with adjustment
	M	Reflex with adjustment
	L	Reflex with adj. for transparent objects detection
	H	Emitter
	D	Receiver with sensitivity adjustment
	Z	Receiver without sensitivity adjustment
emitter	0	Emitter
	X	Emitter with check
	B	4 wires output complementary NO and NC
output	0	Emitter
	P	PNP output
	N	NPN output
housing	0	Plastic housing, axial optic
	1	Metal housing, axial optic
	2	Plastic housing, radial optic
	3	Metal housing, radial optic
plug / cable output	A	Axial cable output
	E	Axial M12 plastic connector output

(*) ATEX models available, contact our Sales Dept. for further information.

available models

cable exit photoeletric sensors

model	distance	housing	adjustment	4 wires (axial optic)		4 wires (right angle optic)	
				NPN NO + NC	PNP NO + NC	NPN NO + NC	PNP NO + NC
diffuse reflection	100 mm	plastic	-	FAR2/BN-0A	FAR2/BP-0A	FAR2/BN-2A	FAR2/BP-2A
			●	FAR3/BN-0A	FAR3/BP-0A	FAR3/BN-2A	FAR3/BP-2A
		metallic	-	FAR2/BN-1A	FAR2/BP-1A	FAR2/BN-3A	FAR2/BP-3A
			●	FAR3/BN-1A	FAR3/BP-1A	FAR3/BN-3A	FAR3/BP-3A
	200 mm	plastic		FAI4/BN-0A	FAI4/BP-0A	FAI4/BN-2A	FAI4/BP-2A
			-	FAI5/BN-0A	FAI5/BP-0A	FAI5/BN-2A	FAI5/BP-2A
		metallic	●	FAI4/BN-1A	FAI4/BP-1A	FAI4/BN-3A	FAI4/BP-3A
			-	FAI5/BN-1A	FAI5/BP-1A	FAI5/BN-3A	FAI5/BP-3A
	400 mm	plastic		FAI6/BN-0A	FAI6/BP-0A	FAI6/BN-2A	FAI6/BP-2A
			●	FAI7/BN-0A	FAI7/BP-0A	FAI7/BN-2A	FAI7/BP-2A
		metallic	-	FAI6/BN-1A	FAI6/BP-1A	FAI6/BN-3A	FAI6/BP-3A
			●	FAI7/BN-1A	FAI7/BP-1A	FAI7/BN-3A	FAI7/BP-3A
	1,000 mm (axial)	plastic		FAI8/BN-0A	FAI8/BP-0A	FAI8/BN-2A	FAI8/BP-2A
	800 mm (90°)	metallic		FAI8/BN-1A	FAI8/BP-1A	FAI8/BN-3A	FAI8/BP-3A
retroreflective	5 m (axial) 4 m (90°)	plastic	-	FAIC/BN-0A	FAIC/BP-0A	FAIC/BN-2A	FAIC/BP-2A
			●	FAIM/BN-0A	FAIM/BP-0A	FAIM/BN-2A	FAIM/BP-2A
		metallic	-	FAIC/BN-1A	FAIC/BP-1A	FAIC/BN-3A	FAIC/BP-3A
			●	FAIM/BN-1A	FAIM/BP-1A	FAIM/BN-3A	FAIM/BP-3A
polarized	4 m (axial) 2.5 m (90°)	plastic	-	FARP/BN-0A	FARP/BP-0A	FARP/BN-2A	FARP/BP-2A
			●	FARN/BN-0A	FARN/BP-0A	FARN/BN-2A	FARN/BP-2A
		metallic	-	FARP/BN-1A	FARP/BP-1A	FARP/BN-3A	FARP/BP-3A
			●	FARN/BN-1A	FARN/BP-1A	FARN/BN-3A	FARN/BP-3A
trasparents	0.1...1.5 m	plastic		FARL/BN-0A	FARL/BP-0A	FARL/BN-2A	FARL/BP-2A
		metallic		FARL/BN-1A	FARL/BP-1A	FARL/BN-3A	FARL/BP-3A
through-beam	20 m (axial) 15 m (90°)	plastic	emitter	FAIH/00-0A		FAIH/00-2A	
			emitt. + check	FAIH/X0-0A		FAIH/X0-2A	
			receiver	FAIZ/BN-0A	FAIZ/BP-0A	FAIZ/BN-2A	FAIZ/BP-2A
			adj. receiver	FAID/BN-0A	FAID/BP-0A	FAID/BN-2A	FAID/BP-2A
		metallic	emitter	FAIH/00-1A		FAIH/00-3A	
			emitt. + check	FAIH/X0-1A		FAIH/X0-3A	
			receiver	FAIZ/BN-0A	FAIZ/BP-0A	FAIZ/BN-2A	FAIZ/BP-2A
			adj. receiver	FAID/BN-1A	FAID/BP-1A	FAID/BN-3A	FAID/BP-3A

available models

plug cable exit photoeletric sensors

model	distance	housing	adjustment	4 wires (axial optic)		4 wires (right angle optic)	
				NPN NO + NC	PNP NO + NC	NPN NO + NC	PNP NO + NC
diffuse reflection	100 mm	plastic	-	FAR2/BN-0E	FAR2/BP-0E	FAR2/BN-2E	FAR2/BP-2E
			●	FAR3/BN-0E	FAR3/BP-0E	FAR3/BN-2E	FAR3/BP-2E
		metallic	-	FAR2/BN-1E	FAR2/BP-1E	FAR2/BN-3E	FAR2/BP-3E
			●	FAR3/BN-1E	FAR3/BP-1E	FAR3/BN-3E	FAR3/BP-3E
	200 mm	plastic	-	FAI4/BN-0E	FAI4/BP-0E	FAI4/BN-2E	FAI4/BP-2E
			●	FAI5/BN-0E	FAI5/BP-0E	FAI5/BN-2E	FAI5/BP-2E
		metallic	-	FAI4/BN-1E	FAI4/BP-1E	FAI4/BN-3E	FAI4/BP-3E
			●	FAI5/BN-0E	FAI5/BP-0E	FAI5/BN-2E	FAI5/BP-2E
	400 mm	plastic	-	FAI6/BN-0E	FAI6/BP-0E	FAI6/BN-2E	FAI6/BP-2E
			●	FAI7/BN-0E	FAI7/BP-0E	FAI7/BN-2E	FAI7/BP-2E
		metallic	-	FAI6/BN-1E	FAI6/BP-1E	FAI6/BN-3E	FAI6/BP-3E
			●	FAI7/BN-1E	FAI7/BP-1E	FAI7/BN-3E	FAI7/BP-3E
	1.000 mm (axial)	plastic		FAI8/BN-0E	FAI8/BP-0E	FAI8/BN-2E	FAI8/BP-2E
	800 mm (90°)	metallic		FAI8/BN-1E	FAI8/BP-1E	FAI8/BN-3E	FAI8/BP-3E
retroreflective	5 m (axial) 4 m (90°)	plastic	-	FAIC/BN-0E	FAIC/BP-0E	FAIC/BN-2E	FAIC/BP-2E
			●	FAIM/BN-0E	FAIM/BP-0E	FAIM/BN-2E	FAIM/BP-2E
		metallic	-	FAIC/BN-1E	FAIC/BP-1E	FAIC/BN-3E	FAIC/BP-3E
			●	FAIM/BN-1E	FAIM/BP-1E	FAIM/BN-3E	FAIM/BP-3E
polarized	4 m (axial) 2.5 m (90°)	plastic	-	FARP/BN-0E	FARP/BP-0E	FARP/BN-2E	FARP/BP-2E
			●	FARN/BN-0E	FARN/BP-0E	FARN/BN-2E	FARN/BP-2E
		metallic	-	FARP/BN-1E	FARP/BP-1E	FARP/BN-3E	FARP/BP-3E
			●	FARN/BN-1E	FARN/BP-1E	FARN/BN-3E	FARN/BP-3E
trasparents	0,1...1.5 m	plastic		FARL/BN-0E	FARL/BP-0E	FARL/BN-2E	FARL/BP-2E
		metallic		FARL/BN-1E	FARL/BP-1E	FARL/BN-3E	FARL/BP-3E
through-beam	20 m (axial) 15 m (90°)	plastic	emitter	FAIH/00-0E		FAIH/00-2E	
			emitt. + check	FAIH/X0-0E		FAIH/X0-2E	
			receiver	FAIZ/BN-0E	FAIZ/BP-0E	FAIZ/BN-2E	FAIZ/BP-2E
			adj. receiver	FAID/BN-0E	FAID/BP-0E	FAID/BN-2E	FAID/BP-2E
		metallic	emitter	FAIH/00-1E		FAIH/00-3E	
			emitt. + check	FAIH/X0-1E		FAIH/X0-3E	
			receiver	FAIZ/BN-0E	FAIZ/BP-0E	FAIZ/BN-2E	FAIZ/BP-2E
			adj. receiver	FAID/BN-1E	FAID/BP-1E	FAID/BN-3E	FAID/BP-3E

technical specification

direct reflection models

	red LED emission	
	FAR2/B*-**	FAR3/B*-**
		
nominal sensing distance	100 mm [1]	
emission	red (660 nm)	
hysteresis	≤ 10 %	
repeatability	5 %	
operating voltage	10...30 Vcc	
ripple	≤ 10 %	
no-load supply current	30 mA	
load current	100 mA	
leakage current	10 µA	
output voltage drop	2 V max. IL = 100 mA	
output type	NPN or PNP NO + NC	
switching frequency	250 Hz	
power on delay	200 ms	
power supply protections	polarity reversal, impulsive overvoltage	
output protection	Short circuit (autoreset) Overvoltage	
sensitivity adjustment	-	●
operating temperature range	- 25°C...+ 70°C (without freeze)	
temperature drift	10 % Sr	
protection degree	IP67 (EN60529) [4]	
EMC	in conformity with the EMC Directive according to EN 60947-5-2	
external light interference	3,000 lux (incandescence lamp), 10,000 lux (sunlight)	
LEDs	Yellow (Light status) or (output status in the LO/DO special versions)	
housing material	PBT (plastic) / nicked plated brass (metallic) / PC (cable exit)	
optic material	PC	
tightening torque	1 Nm (plastic), 25 Nm (metallic)	
weight (approximate)	plastic version: 30 g connector / 50 g cable metallic version: 100 g connector / 130 g cable	

[1] White target kodak 90% reflection 100 x 100 mm
[2] Protection guaranteed only with plug cable well mounted

technical specification

direct reflection models

	infrared LED emission				
	FAI4/B*-**	FAI5/B*-**	FAI6/B*-**	FAI7/B*-**	FAI8/B*-**
nominal sensing distance	200 mm [1]		400 mm [2]		1,000 mm [3] (axial) 800 mm [3] (90°)
emission	infrared (880 nm)				
hysteresis	≤ 10 %				
repeatability	5 %				
operating voltage	10...30 Vcc				
ripple	≤ 10 %				
no-load supply current	30 mA				
load current	100 mA				
leakage current	10 µA				
output voltage drop	2 V max. IL = 100 mA				
output type	NPN or PNP NO + NC				
switching frequency	250 Hz				
power on delay	200 ms				
power supply protections	polarity reversal, impulsive overvoltage				
output protection	Short circuit (autoreset) Overvoltage				
sensitivity adjustment	●	-		●	
operating temperature range	- 25°C...+ 70°C (without freeze)				
temperature drift	10 % Sr				
protection degree	IP67 (EN60529) [4]				
EMC	in conformity with the EMC Directive according to EN 60947-5-2				
external light interference	3,000 lux (incandescence lamp), 10,000 lux (sunlight)				
LEDs	Yellow (Light status) or (output status in the LO/DO special versions)				
housing material	PBT (plastic) / nicked plated brass (metallic) / PC (cable exit)				
optic material	PC				
tightening torque	1 Nm (plastic), 25 Nm (metallic)				
weight (approximate)	plastic version: 30 g plug / 50 g cable metallic version: 100 g plug / 130 g cable				

[1] White target kodak 90% reflection 100 x 100 mm [2] White target kodak 90% reflection 200 x 200 mm [3] White target kodak 90% reflection 400 x 400 mm
[4] Protection guaranteed only with plug cable well mounted

technical specification

reflex and polarized models

	retroreflective		polarized		transparent objects detection
	FAIC/B*-** [1]	FAIM/B*-** [1]	FARP/B*-** [1]	FARN/B*-** [1]	FARL/B*-** [2]
nominal sensing distance	5 m (axial), 4 m (radial)		4 m (axial), 2.5 m (radial)		1.5 m
emission	infrared (880 nm)		red (660 nm)		
hysteresis	≤ 10 %				
repeatability	5 %				
operating voltage	10...30 Vdc				
ripple	≤ 10 %				
no-load supply current	30 mA				
load current	100 mA				
leakage current	≤ 10 µA				
output voltage drop	2 V max. IL = 100 mA				
output type	NPN or PNP NO + NC				
switching frequency	250 Hz				
power on delay	200 ms				
power supply protections	polarity reversal, impulsive overvoltage				
output protection	Short circuit (autoreset) Overvoltage				
sensitivity adjustment	-	●	-	●	
operating temperature range	- 25°C...+ 70°C (without freeze)				
temperature drift	10 % Sr				
protection degree	IP67 (EN60529) [3]				
EMC	in conformity with the EMC Directive according to EN 60947-5-2				
external light interference	5000 lux (incandescence lamp), 10.000 lux (sunlight)				
LEDs	Yellow (Light status) or (output status in the LO/DO special versions)				
housing material	PBT (plastic) / nicked plated brass (metallic) / PC (cable exit)				
optic material	PC		plastic		PC
tightening torque	1 Nm (plastic), 25 Nm (metallic)				
weight (approximate)	plastic version: 30 g plug / 50 g cable metallic version: 100 g plug / 130 g cable				

[1] With RL 110 reflector [2] With RL 113G or RL 116 reflector [3] Protection guaranteed only with plug cable well mounted

technical specification

throug beam models

	emitter		receiver	
	FAIH/X0-**	FAIH/00-**	FAIZ/B*-**	FAID/B*-**
				
nominal sensing distance	20 m axial model / 15 m right angle model			
emission	infrared (880 nm)			
hysteresis	≤ 10 %			
repeatability	5 %			
operating voltage	10...30 Vdc			
ripple	≤ 10 %			
no-load supply current	25 mA			
load current	-		100 mA	
leakage current	-		10 µA	
output voltage drop	-		2 V max. IL = 100 mA	
output type	-		NPN or PNP NO + NC	
switching frequency	-		250 Hz	
power on delay	-		200 ms	
power supply protections	impulsive overvoltage polarity reversal			
output protection	-		Short circuit (autoreset) - Overvoltage	
sensitivity adjustment	-		-	●
operating temperature range	- 25°C...+ 70°C (without freeze)			
temperature drift	10 % Sr			
check input	BK/2 connected to 0 V switches off the emission	-		
EMC	in conformity with the EMC Directive according to EN 60947-5-2			
protection degree	IP67 (EN60529) [1]			
external light interference	5,000 lux (incandescence lamp), 10,000 lux (sunlight)			
LEDs	green (power ON)		Yellow (light state or output status in the special LO/DO versions)	
housing material	PBT (plastic) / nicked plated brass (metallic) / PC (cable exit)			
optic material	PC			
tightening torque	1 Nm (plastic), 25 Nm (metallic)			
weight (approximate)	plastic version: 30 g connector / 50 g cable metallic version: 100 g connector / 130 g cable			

[1] Protection guaranteed only with plug cable well mounted

electrical diagrams of the connections

emitter	receiver NPN	receiver PNP

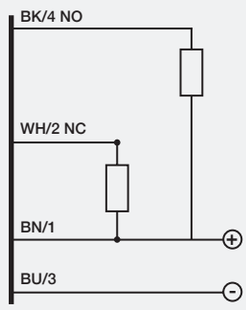

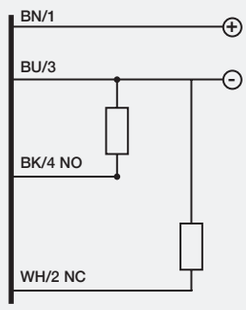

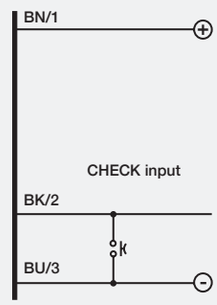

BN	brown
BU	blue
BK	black
WH	white
PK	pink
GY	gray

plug

M12 diffuse reflection polarized receiver	M12 emitter with check	M12 emitter without check

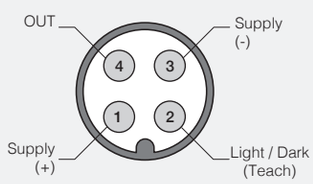

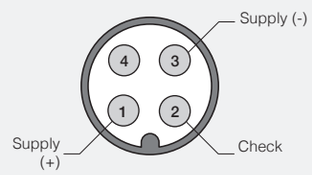

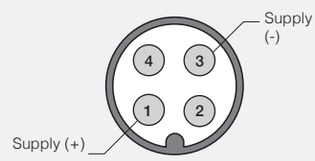

response diagram

direct diffuse models

FAR2,FAR3/**-(0,1)* excess gain	FAR2,FAR3/**-(0,1)* spot dimension

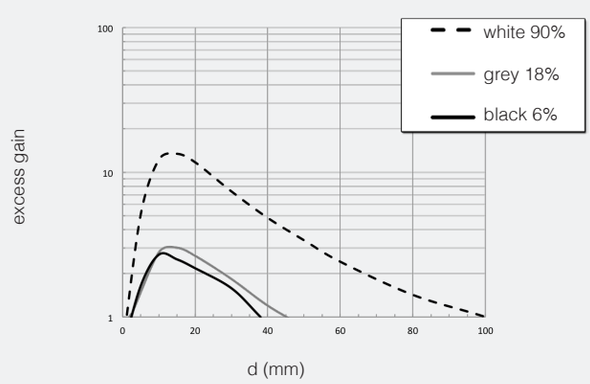

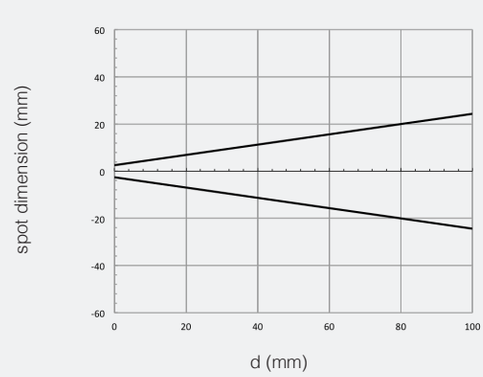

FAR2,FAR3/**-(0,1)* parallel displacement

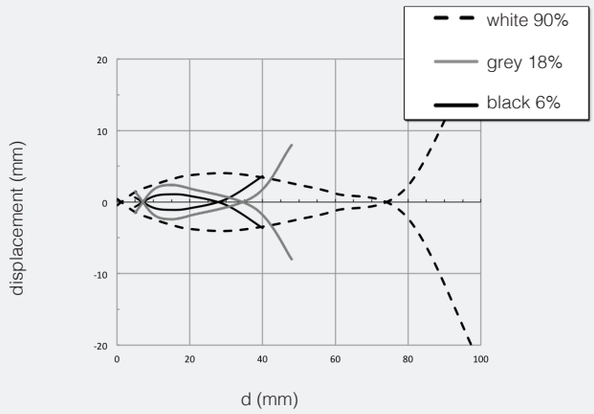

FAR2,FAR3/**-(2,3)* excess gain

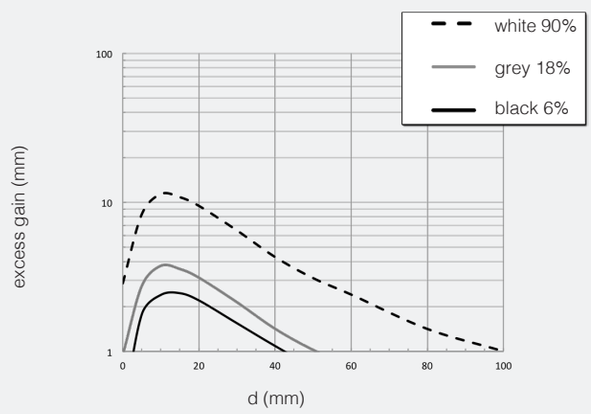

FAR2,FAR3/**-(2,3)* spot dimension

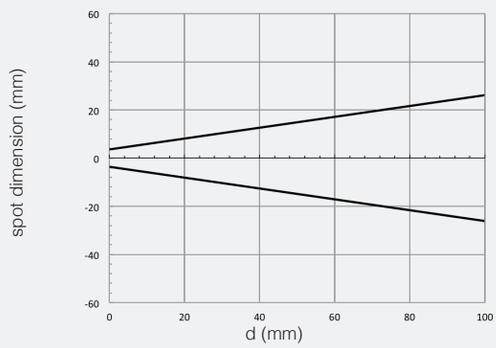

FAR2,FAR3/**-(2,3)* parallel displacement

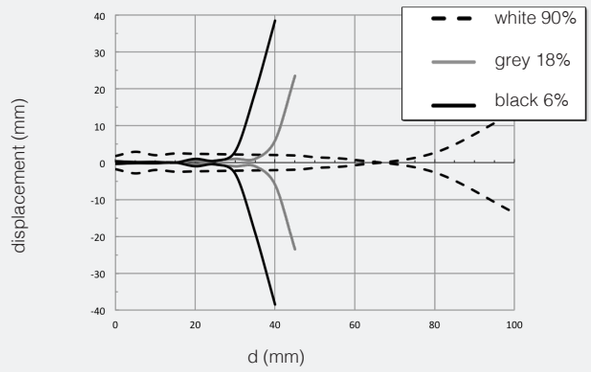

FAI4, FAI5/**-(0,1)* excess gain

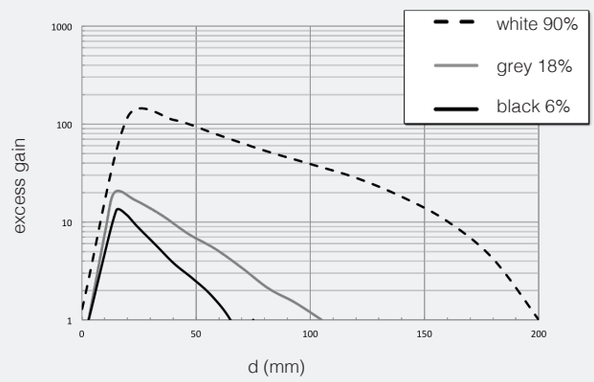

FAI4, FAI5/**-(0,1)* spot dimension

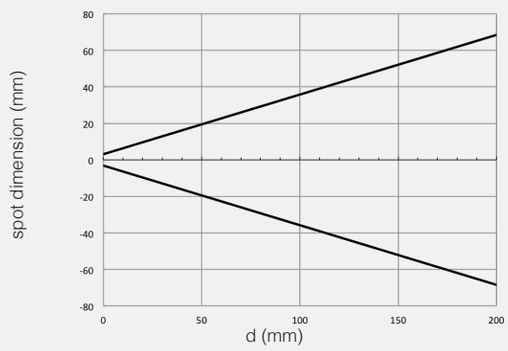

FAI4, FAI5/**-(0,1)* parallel displacement

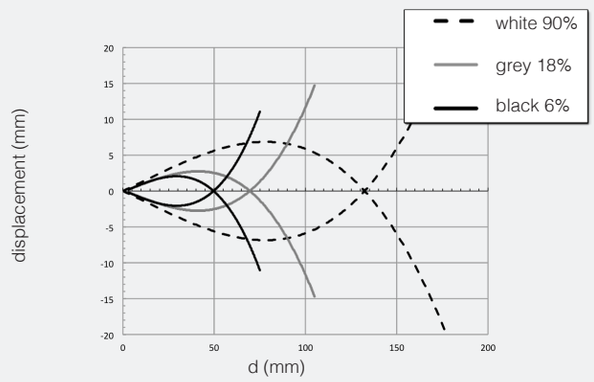

FAI4, FAI5/**-(2,3)* excess gain

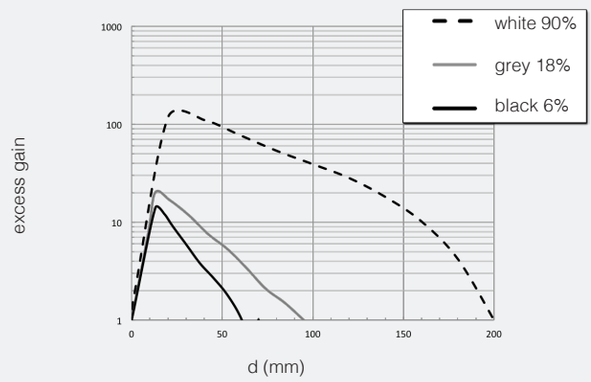

response diagrams

direct diffuse models

FAI4, FAI5/**-(2,3)* spot dimension

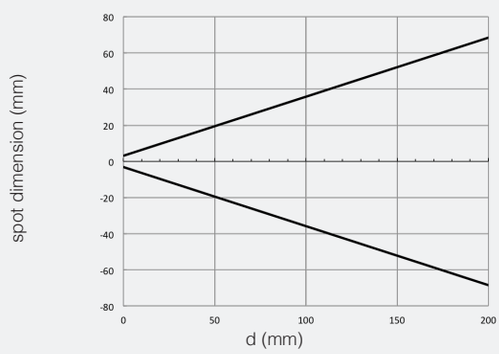

FAI4, FAI5/**-(2,3)* parallel displacement

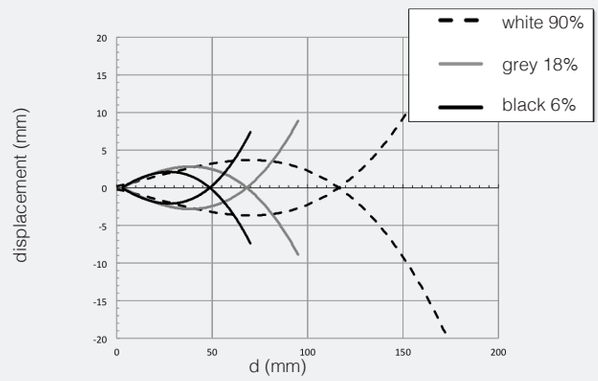

FAI6,FAI7/**-(0,1)* excess gain

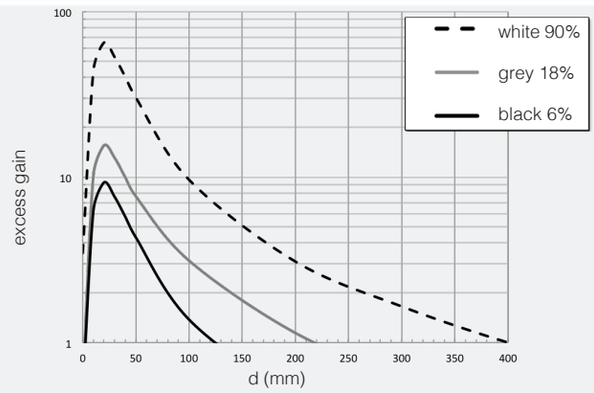

FAI6,FAI7/**-(0,1)* spot dimension

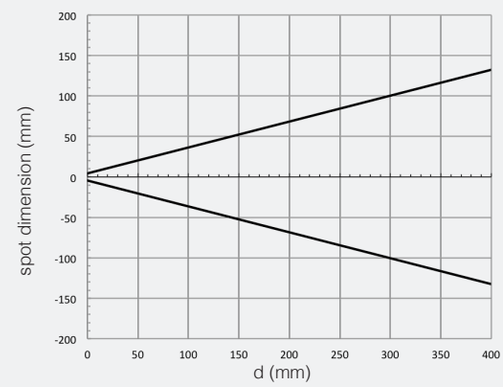

FAI6,FAI7/**-(0,1)*parallel displacement

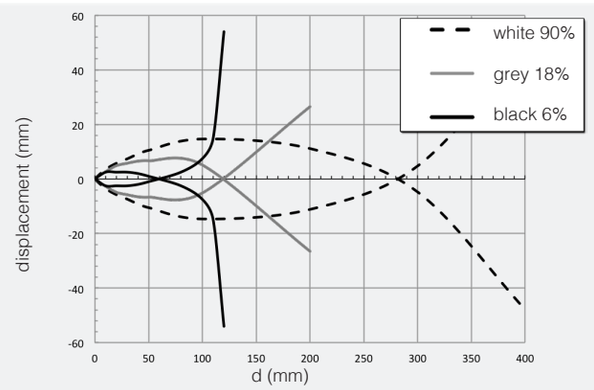

FAI6,FAI7/**-(2,3)* excess gain

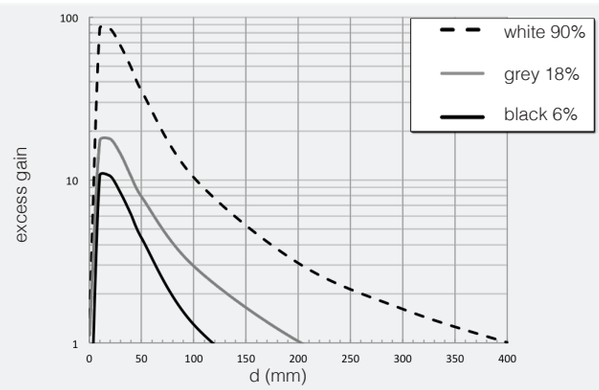

FAI6,FAI7/**-(2,3)* spot dimension

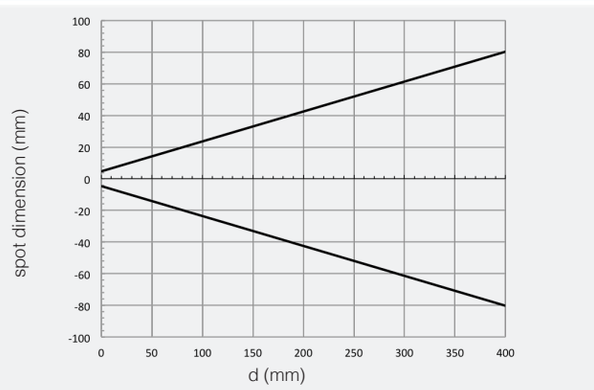

FAI6,FAI7/**-(2,3)* parallel displacement

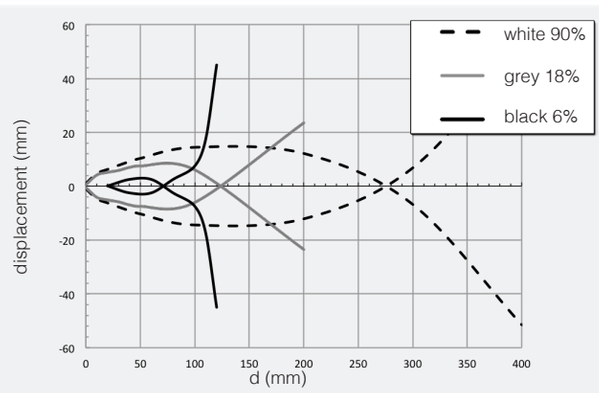

FAI8/**-(0,1)* excess gain

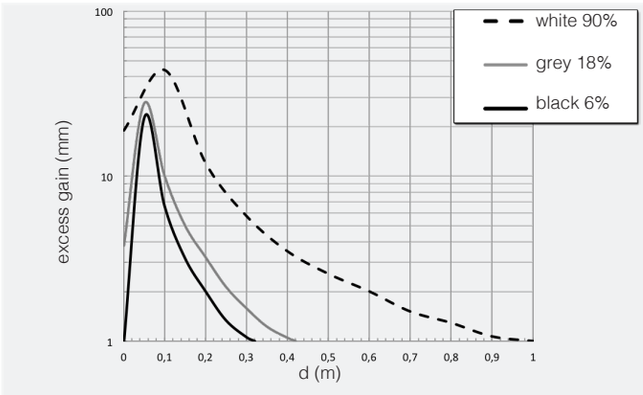

FAI8/**-(0,1)* spot dimension

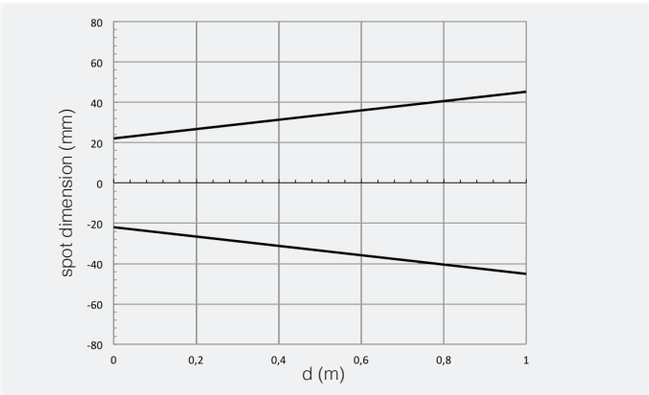

FAI8/**-(0,1)* parallel displacement

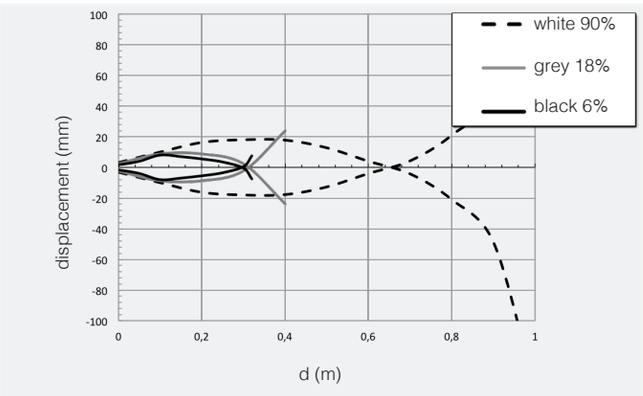

FAI8/**-(2,3)* excess gain

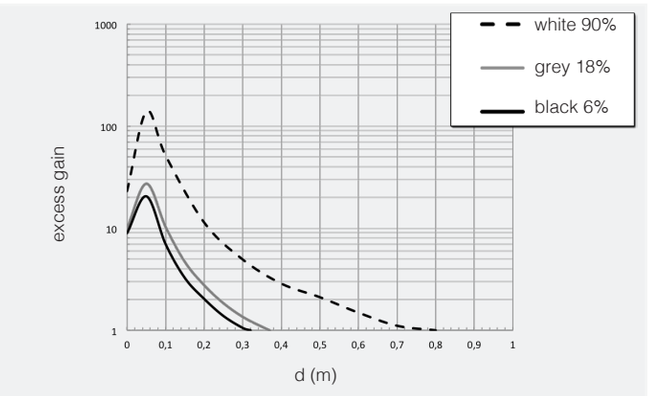

FAI8/**-(2,3)* spot dimension

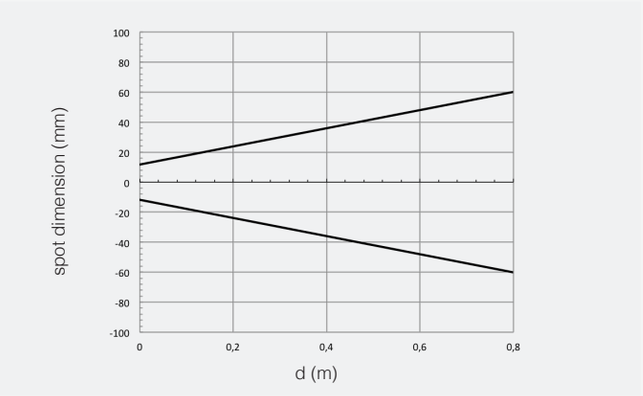

FAI8/**-(2,3)* parallel displacement

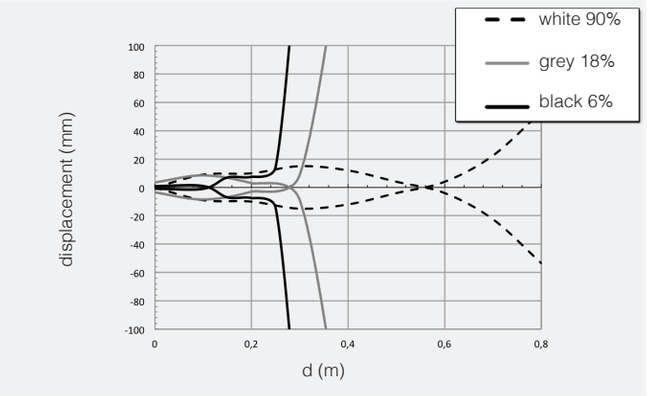

response diagrams

retro-reflective models

FAIC,FAIM/**-(0,1)* excess gain

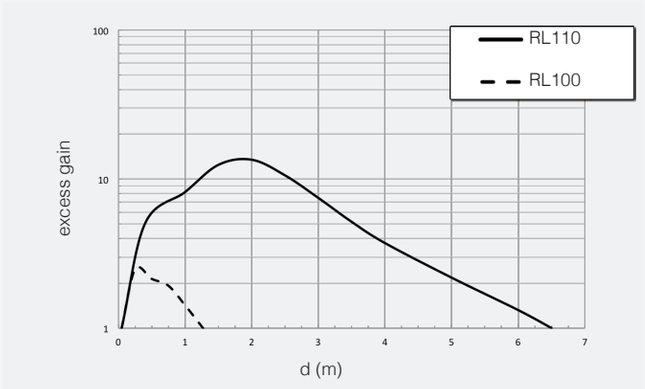

FAIC,FAIM/**-(0,1)* spot dimension

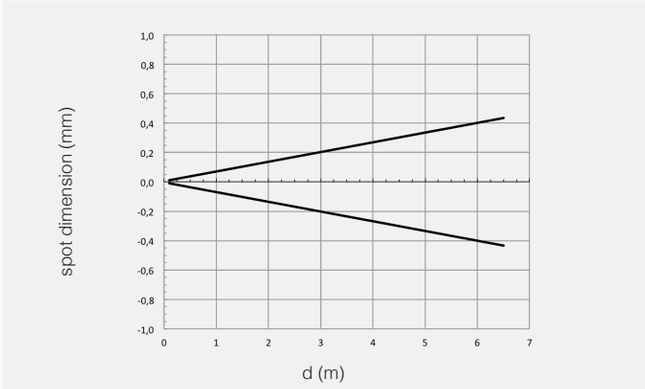

FAIC,FAIM/**-(0,1)* parallel displacement

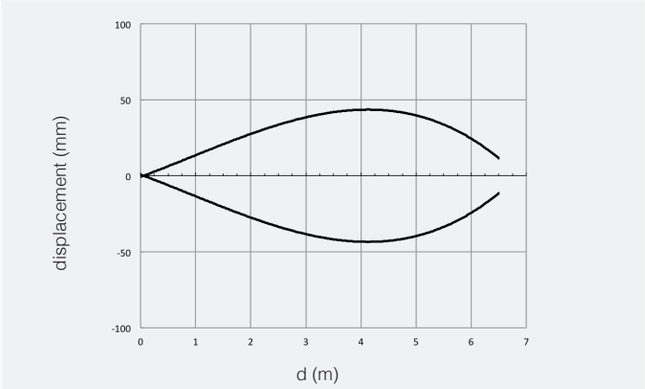

FAIC,FAIM/**-(2,3)* excess gain

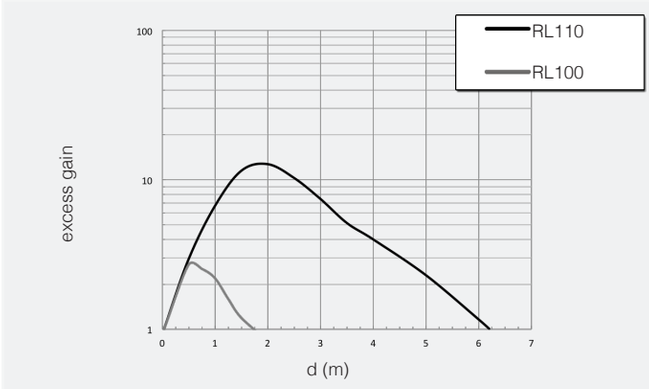

FAIC,FAIM/**-(2,3)* dispot diameter

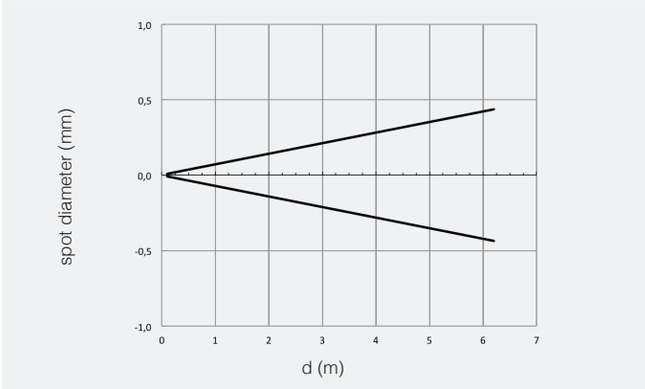

FAIC,FAIM/**-(2,3)* parallel displacement

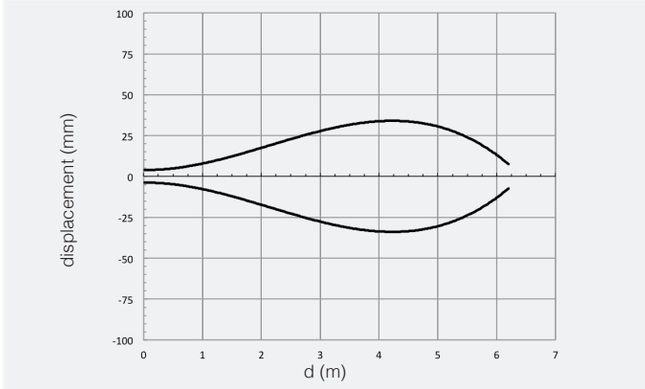

response diagrams

polarized models

FARP,FARN/**-(0,1)* excess gain

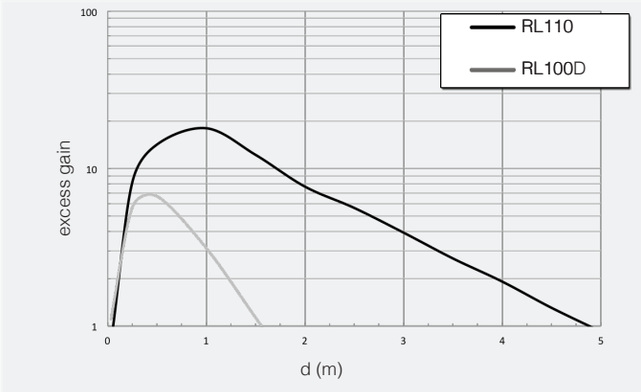

FARP,FARN/**-(0,1)* spot diameter

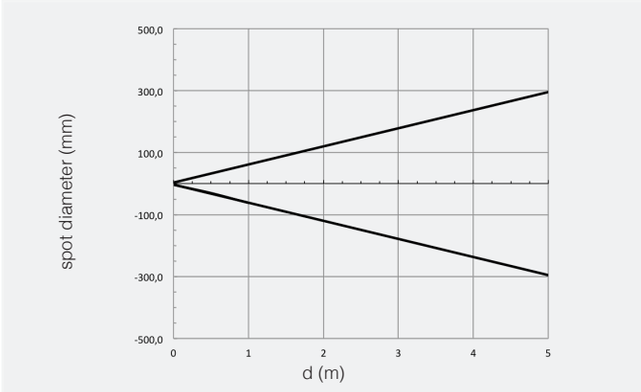

FARP,FARN/**-(0,1)* parallel displacement

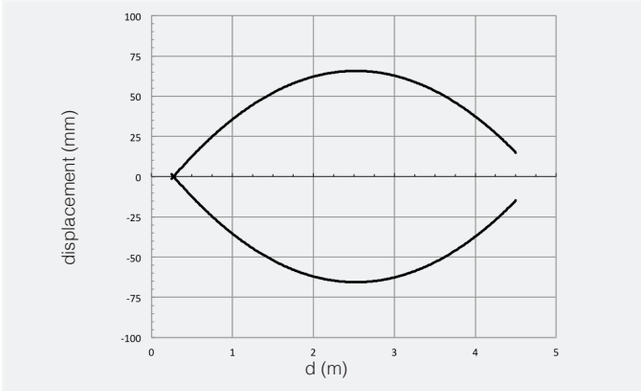

FARP,FARN/**-(2,3)* excess gain

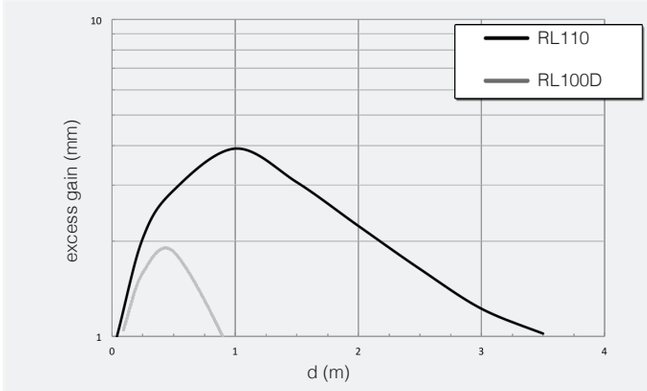

FARP,FARN/**-(2,3)* spot diameter

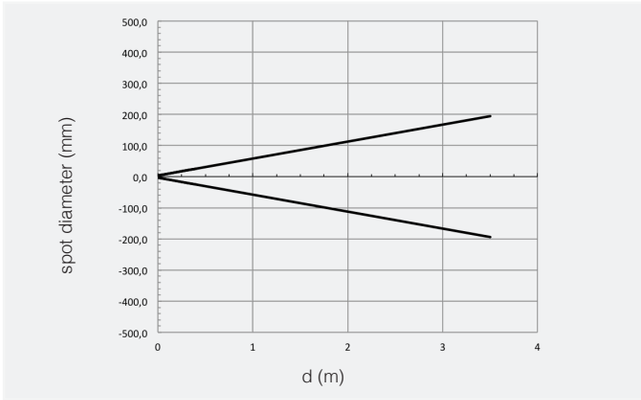

FARP,FARN/**-(2,3)* parallel displacement

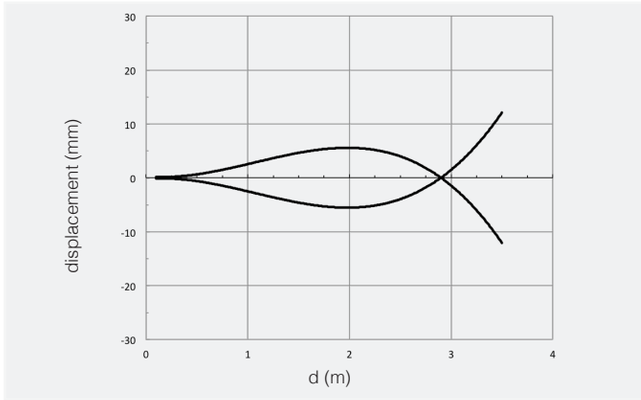

response diagrams

polarized models for transparent objects (diagrams calculated with RL110)

FARL/-* excess gain**

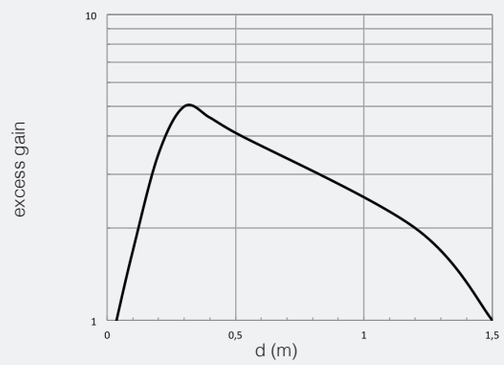

FARL/-* spot diameter**

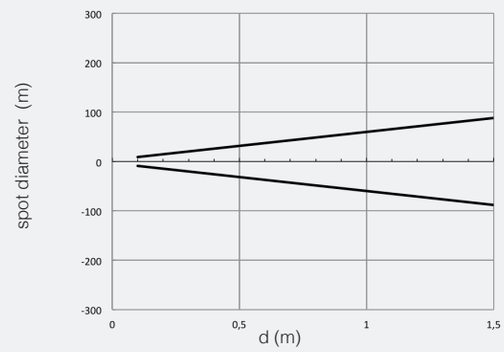

response diagrams

polarized models for transparent objects

FARL/-* parallel displacement**

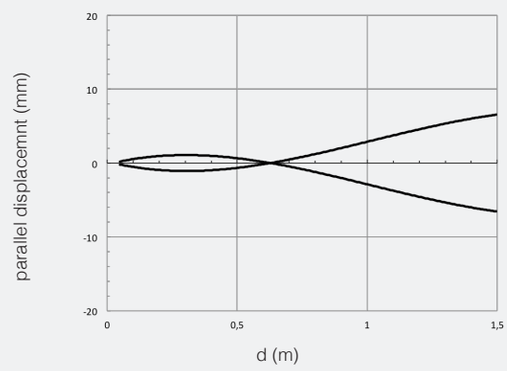

response diagrams

through beam models

FAIH/-(0,1)* FAID/**-(0,1)*, excess gain**

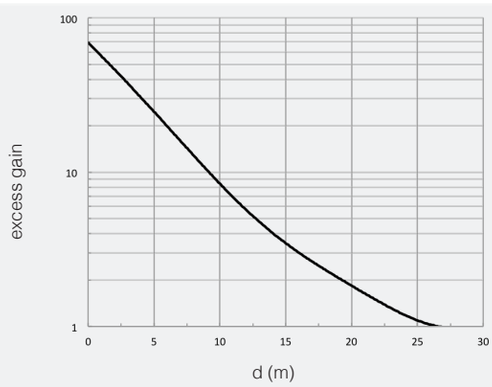

FAIH/-(0,1)* FAID/**-(0,1)*, spot diameter**

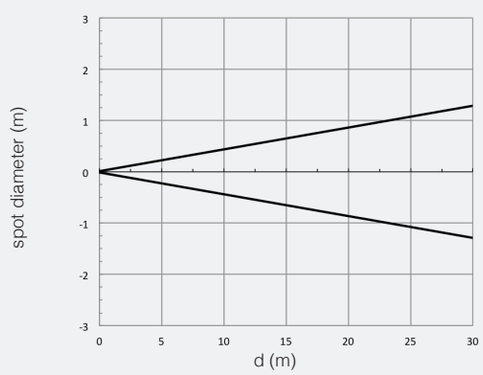

FAIH/**-(0,1)* FAID/**-(0,1)*, parallel displacement

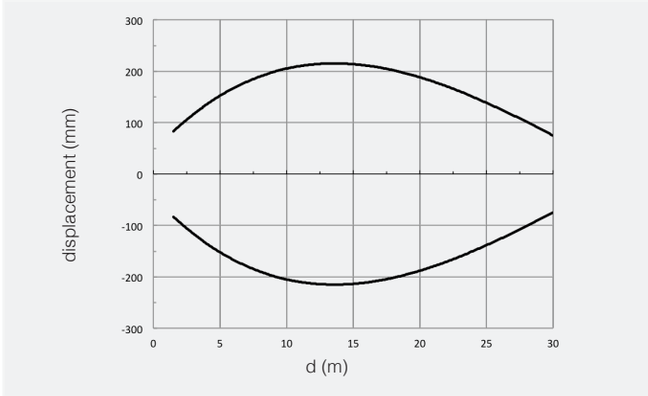

response diagrams

through beam models

FAIH/**-(2,3)* FAID/**-(2,3)*, excess gain

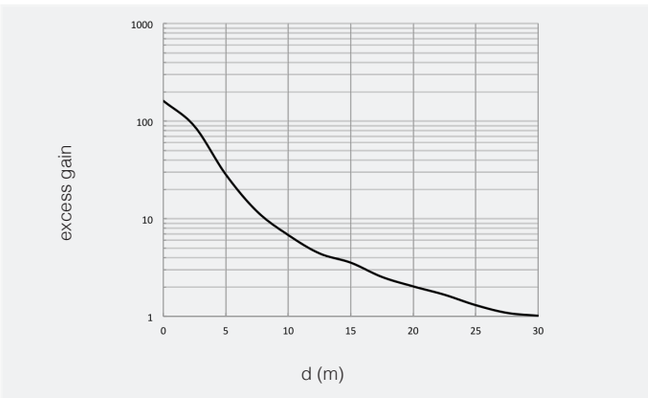

FAIH/**-(2,3)* FAID/**-(2,3)*, spot diameter

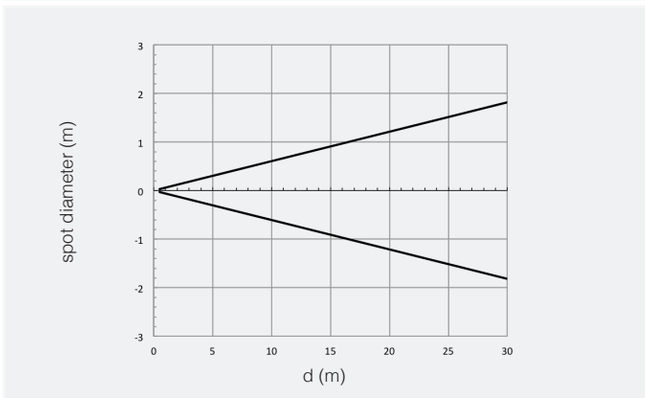

FAIH/**-(2,3)* FAID/**-(2,3)*, parallel displacement

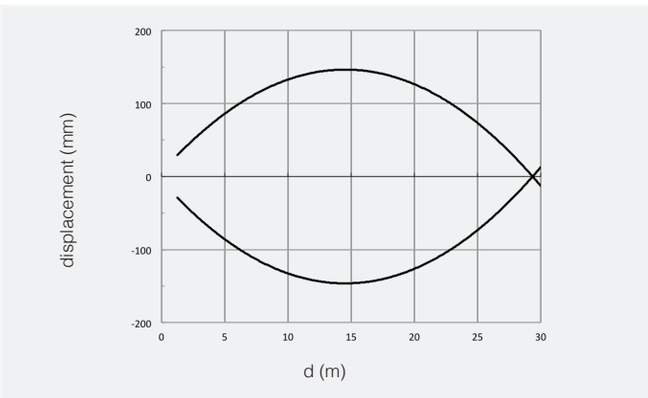

dimensions (mm)

FA**/**-0A; FA**-**1A	FA**/**-0E; FA**-**1E	FA**/**-2A; FA**-**3A	FA**/**-2E; FA**-**3E
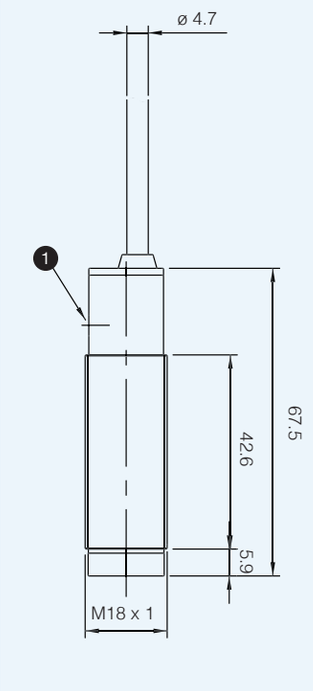	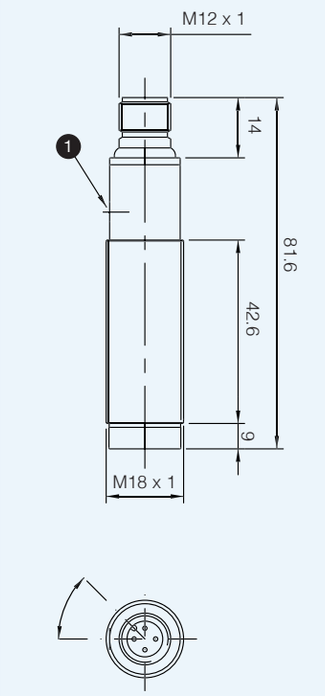	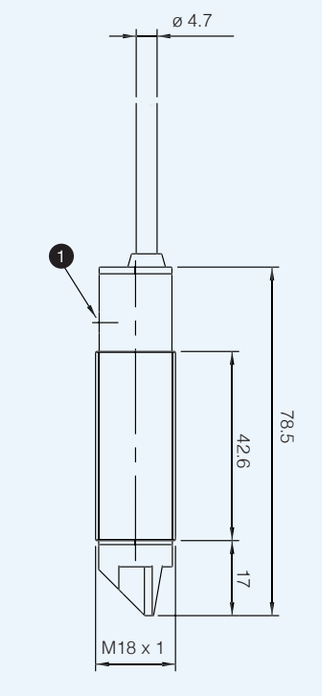	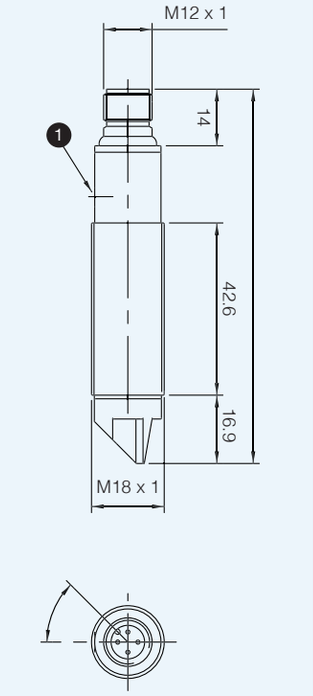

1 Trimmer for sensibility regulation

dimensions (mm)

accessories included in all plastic models

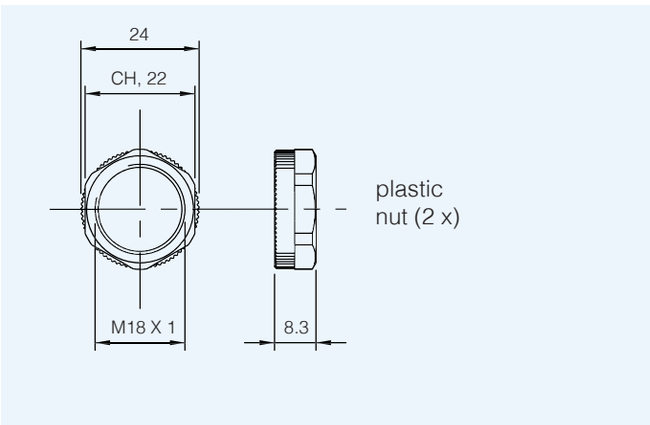

dimensions (mm)

accessories included in all metallic models

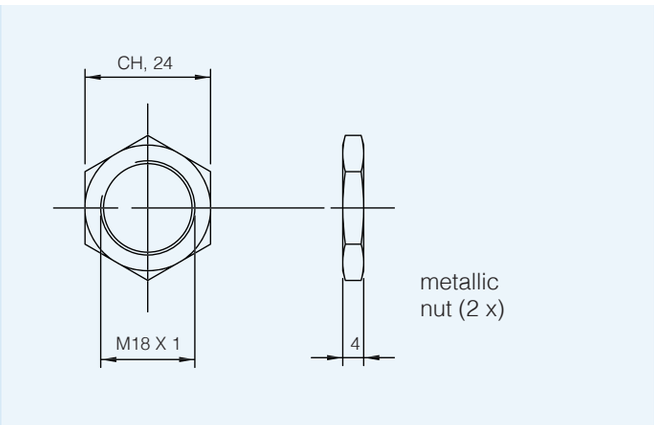

FARS series

M18 direct diffuse with adjustable background suppression

features

- 30...130 mm adjustable max reading distance
- Cable or M12 plastic plug versions
- Supply voltage 10...30 Vdc, output current 100 mA
- LED light status indicator
- IP67 protection degree
- Complete protection against electrical damages
- ATEX models, cat.3, available on request
- Approvals: CE and cULus Listed

web contents

- Application notes
- Photos
- Catalogue / Manuals

code description(*)

FARS / B P - 0 A

series	FARS	M18 photoelectric sensor with adjustable 30...130 mm
NO/NC	B	4 wires output complementary NO and NC
output	P	PNP output
	N	NPN output
housing	0	Plastic housing axial optic
	1	Metal housing axial optic
cable/ plug	A	Axial cable output 2 m
	E	Axial M12 plastic plug output

(*) ATEX models available, contact our Sales Dept. for further information.

available models

function	distance	housing	4 wires NO + NC PNP		4 wires NO + NC NPN	
			cable	plug	cable	plug
background suppression	30...130 mm	axial plastic	FARS/BP-0A	FARS/BP-0E	FARS/BN-0A	FARS/BN-0E
		axial metallic metallic	FARS/BP-1A	FARS/BP-1E	FARS/BN-1A	FARS/BN-1E
	60...100		-	FARS/BP-1E7712	-	FARS/BN-1E7712

technical specification

background suppression

	FARS/**-**
	
nominal sensing distance	30...130 mm
scanning adjustable range Sd	30...130 mm (white paper)
emission	red light (660 nm)
hysteresis	≤ 10 %
repeatability	10 %
operating voltage	10...30 Vcc
ripple	≤ 10 %
no-load supply current	25 mA
load current	100 mA
leakage current	≤ 10 µA (@ 30 Vcc)
output voltage drop	2 V max. IL = 100 mA
output type	NPN o PNP; NO + NC or LO/DO selectable
switching frequency	1 kHz
power on delay	200 ms
power supply protections	short circuit (auto reset)
operating temperature range	- 25°C...+ 70°C (without freeze)
temperature drift	≤ 10 % Sd (≤ 3 % Sd per Sd 60...110 mm)
distance adjustment	potentiometer
protection degree	IP67 (EN60529) [1]
EMC	in conformity with the EMC Directive according to EN 60947-5-2
external light interference	5,000 lux (incandescence lamp), 10,000 lux (sunlight)
LEDs	yellow / light status / short circuit / internal error
cable exit	PVC 4x0, 34 mmq; Ø 4,7 mm; 2m
plug exit	M12 4 pins, male
housing material	PBT (plastic) / nicked plated brass (metallic) / PC (cable exit and plug)
optic material	plastic
tightening torque	25 Nm (metallic)
weight (approximate)	plastic version: 30 g connector / 50 g cable metallic version: 100 g connector / 130 g cable
yellow LED status	sensor status
ON	light status
OFF	dark status
flashing slowly	output short circuit detected
flashing 3 of 10	internal error

[1] Protection guaranteed only with plug cable well mounted

electrical diagrams of the connections

NPN	PNP

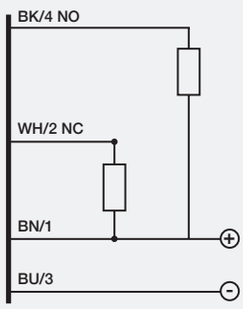

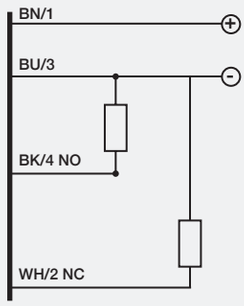

BN	brown
BU	blue
BK	black
WH	white
PK	pink
GY	gray

plug

M12 4 wires output complementary NO and NC

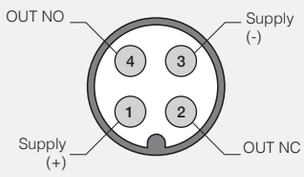

response diagram

FARS/-** spot dimension**

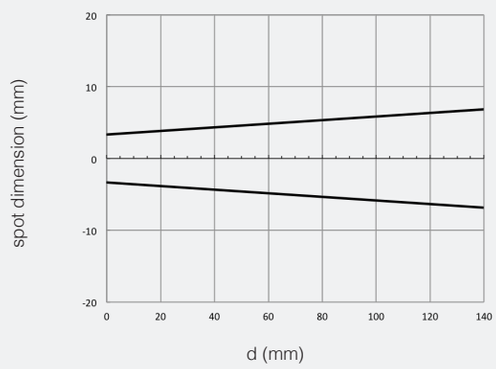

FARS/-** parallel displacement**

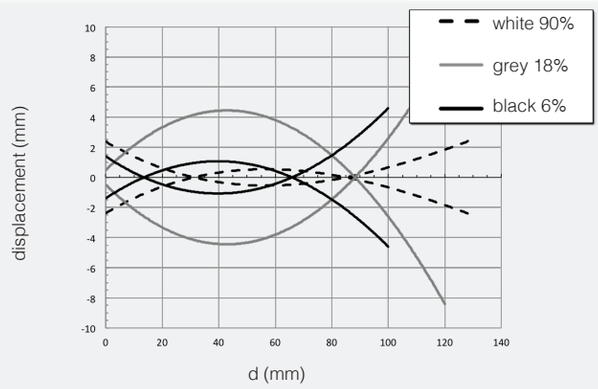

FARS/-** reduction of sensing distance**

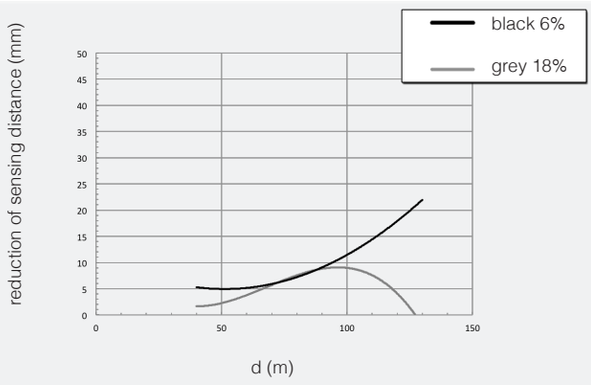

FARS/-** blind zone**

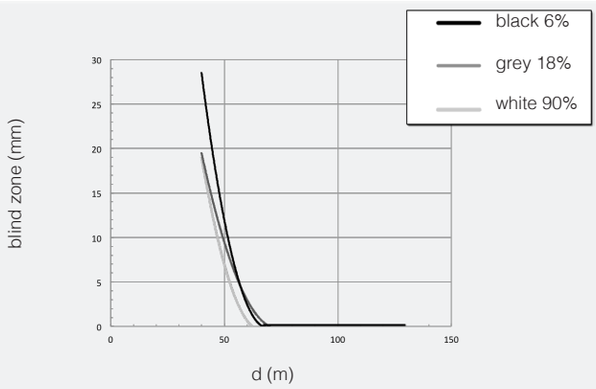

dimensions (mm)

FARS/**-*A	FARS/**-*E
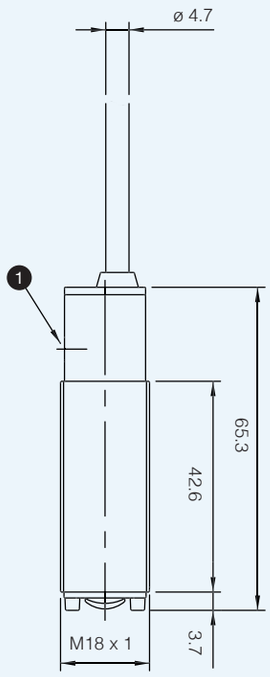	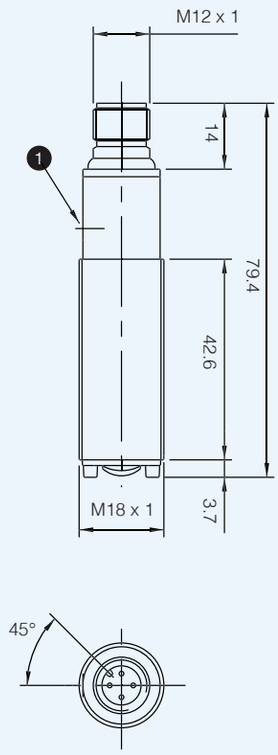

1 potentiometer for sensitivity adjustment

dimensions (mm)

accessories included in all plastic models

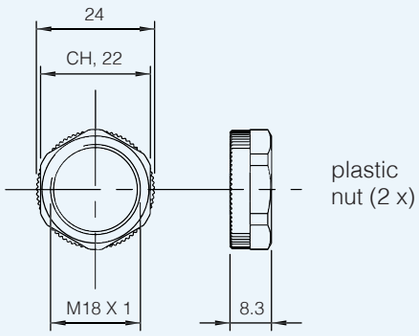

dimensions (mm)

accessories included in all metallic models

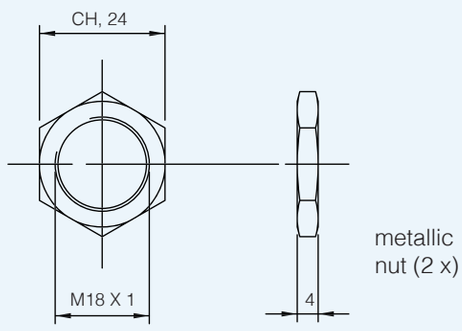

FA LASER series

M18 photoelectric sensors
DC LASER emission

features

- **Complete range of M18 sensors with 10...30 Vdc power supply**
- **Axial and radial optic with flat surface**
- **Visible red laser emission models**
- **IP67 protection degree**
- **Metallic or plastic housing**
- **Sensitivity adjustment available for all models**
- **Total protection against any type of electric damages**
- **Approvals: CE and cULus listed**

Cylindrical
M18 DC LASER

web contents

- **Application notes**
- **Photos**
- **Catalogue / Manuals**

code description

FA L N / B P - 0 A

series	FA	M18 sensor with 3/4 DC wires
emission	L	Red laser diode emission
tiype	4	300 mm direct reflection with adjustment
	N	Polarized with adjustment
	H	Emitter
	D	Receiver with sensitivity adjustment
emitter	0	LO/DO selectable output, 4 wires - Emitter
	X	Emitter with check
	B	4 wires output Complementary NO + NC
output	0	Emitter
	P	PNP output
	N	NPN output
housing	0	Plastic housing axial optic
	1	Metal housing axial optic
	2	Plastic housing radial optic
	3	Metal housing radial optic
cable / plug output	A	Axial cable output
	E	Axial M12 plastic connector output

(*) ATEX models available, contact our Sales Dept. for further information.

available models

model	distance	housing	4 wires NPN NO + NC		4 wires PNP NO + NC	
			cable	plug	cable	plug
direct diffuse	300 mm	axial plastic	FAL4/BN-0A	FAL4/BN-0E	FAL4/BP-0A	FAL4/BP-0E
		axial metal	FAL4/BN-1A	FAL4/BN-1E	FAL4/BP-1A	FAL4/BP-1E
	200 mm	90° plastic	FAL4/BN-2A	FAL4/BN-2E	FAL4/BP-2A	FAL4/BP-2E
		90° metal	FAL4/BN-3A	FAL4/BN-3E	FAL4/BP-3A	FAL4/BP-3E
polarized	20 m (RL 110) 30 m (RL 201)	axial plastic	FALN/BN-0A	FALN/BN-0E	FALN/BP-0A	FALN/BP-0E
		axial metal	FALN/BN-1A	FALN/BN-1E	FALN/BP-1A	FALN/BP-1E
		90° plastic	FALN/BN-2A	FALN/BN-2E	FALN/BP-2A	FALN/BP-2E
		90° metal	FALN/BN-3A	FALN/BN-3E	FALN/BP-3A	FALN/BP-3E
emitter	50 m	axial plastic	-	FALH/X0-0E	-	-
		axial metal	-	FALH/X0-1E	FALH/X0-1A	-
		90° plastic	-	FALH/X0-2E	FALH/X0-2A	-
		90° metal	-	FALH/X0-3E	FALH/X0-3A	FALH/X0-3E
receiver	50 m	axial plastic	FALD/BN-1A	FALD/BN-0E	FALD/BP-0A	FALD/BP-0E
		axial metal	FALD/BN-2A	FALD/BN-1E	FALD/BP-1A	FALD/BP-1E
		90° plastic	FALD/BN-3A	FALD/BN-2E	FALD/BP-2A	FALD/BP-2E
		90° metal	FALD/BN-4A	FALD/BN-3E	FALD/BP-3A	FALD/BP-3E

technical specification

direct reflection models

	FAL4/**-**
nominal sensing distance	300 mm (axial optic focused 100 mm) [1] 200 mm (radial optic focused 100 mm) [1]
emission	red laser diode (650 nm) class 1 laser (IEC60825-1)
minimum detectable object	0.1 mm
hysteresis	≤ 10 %
repeatability	5 %
operating voltage	10...30 Vdc
ripple	≤ 10 %
no-load supply current	≤ 30 mA
load current	100 mA
leakage current	≤ 10 µA a V max
output voltage drop	2 V max. IL = 100 mA
output type	NPN or PNP; NO + NC or LO/DO selectable
switching frequency	800 Hz
power on delay	200 ms
power supply protections	polarity reversal, transient
output protection	short circuit (autoreset) Overvoltage
sensitivity adjustment	yes / Teach-In function
operating temperature range	- 15°C...+ 55°C (without freeze)
temperature drift	10 % Sr
protection degree	IP67 (EN60529) [2]
EMC	in conformity with the EMC Directive according to EN 60947-5-2
external light interference	3,000 lux (incandescent lamp) 10,000 lux (sunlight)
LEDs	green power supply / yellow (ON-Light state EG ≥ 2) / yellow (Flashing-Light state 1 < EG < 2) / yellow (OFF-Dark state)
housing material	PBT (plastic) / nicked plated brass (metallic) / PC (cable exit)
optic material	PC / glass
tightening torque	1 Nm (plastic), 25 Nm (metallic)
weight (approximate)	plastic version: 30 g connector / 50 g cable metallic version: 100 g connector / 130 g cable

[1] White target kodak 90% reflection 100 x 100 mm
[2] Protection guaranteed only with plug cable well mounted

technical specification

polarized models

	FALN/**-**
	
nominal sensing distance	20 m with RL 110 30 m with RL 201; 5 m with RL 100D
emission	red laser diode (650 nm)
emitter	class 1 Laser (IEC 825-1)
minimum detectable object	0.7 mm - 1 m 24 mm - 25 m
spot dimension	see diagram
hysteresis	≤ 10 %
repeatability	5 %
operating voltage	10...30 Vdc
ripple	≤ 10 %
no-load supply current	≤ 30 mA
load current	100 mA
leakage current	≤ 10 µA a V max
output voltage drop	2 V max. IL = 100 mA
output type	NPN or PNP; NO + NC or LO/DO selectable
switching frequency	800 Hz
power on delay	200 ms
power supply protections	polarity reversal, transient
output protection	short circuit (autoreset) overvoltage
sensitivity adjustment	Yes / Teach-In function
operating temperature range	- 15°C...+ 55°C (without freeze)
temperature drift	10 % Sr
protection degree	IP67 (EN60529) [1]
EMC	in conformity with the EMC Directive according to EN 60947-5-2
external light interference	3,000 lux (incandescent lamp) 10,000 lux (sunlight)
LEDs	green power supply / yellow (EG ≥ 2) / yellow (Flashing-Light state 1 < EG < 2) / yellow (OFF-Dark state)
housing material	PBT (plastic) / nicked plated brass (metallic) / PC (cable exit)
optic material	PC / glass
tightening torque	1 Nm (plastic), 25 Nm (metallic)
weight (approximate)	plastic version: 30 g connector / 50 g cable metallic version: 100 g connector / 130 g cable

[1] Protection guaranteed only with plug cable well mounted

technical specification

through beam models

	emitter	receiver
	FALH/X0-**	FALD/**-**
	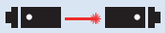	
nominal sensing distance	50 m	
emission	red laser diode (650 nm)	
emitter	class 1 Laser (IEC 60825-1)	
minimum detectable object	10 mm	
spot dimension	see diagram	
hysteresis	≤ 10 %	
repeatability	5 %	
operating voltage	10...30 Vdc	
ripple	≤ 10 %	
no-load supply current	≤ 25 mA	
load current		100 mA
leakage current		≤ 10 µA a Vmax
output voltage drop		2 V max. IL = 100 mA
output type		NPN or PNP
switching frequency		1 kHz
power on delay		200 ms
power supply protections	polarity reversal, transient	
output protection		short circuit (autoreset) overvoltage
sensitivity adjustment		trimmer
operating temperature range	- 15°C...+ 55°C (without freeze)	
temperature drift	10 % Sr	
check input	BK/2 connected to 0 switches off the emission	-
EMC	in conformity with the EMC Directive according to EN 60947-5-2	
protection degree	IP67 (EN60529) [1]	
external light interference	-	
LEDs	green (power supply) yellow (on) yellow (off)	green (power supply) yellow (light status or output status in the special LO/DO version)
housing material	PBT (plastic) / nicked plated brass (metallic) / PC (cable exit)	
optic material	PC / glass	
tightening torque	1 Nm (plastic), 25 Nm (metallic)	
weight (approximate)	plastic version: 30 g connector / 50 g cable metallic version: 100 g connector / 130 g cable	

[1] Protection guaranteed only with plug cable well mounted

electrical diagrams of the connections

emitter	receiver NPN	receiver PNP

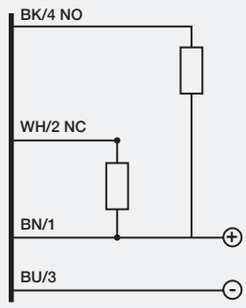

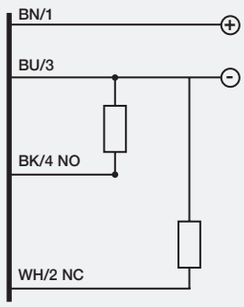

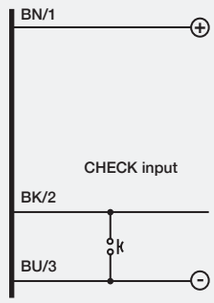

BN	brown
BU	blue
BK	black
WH	white
PK	pink
GY	gray

plug

M12 diffuse reflection polarized receiver	M12 emitter with check	M12 emitter without check

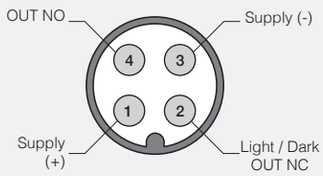

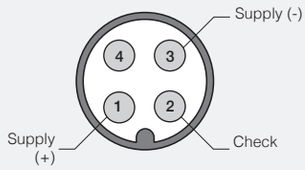

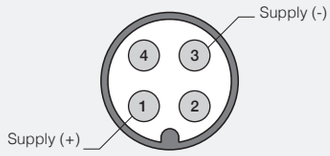

response diagram

through beam models

FALH/**-0*, FALD/**- 0* excess gain	FALH/**- 0*, FALD/**- 0* spot dimension

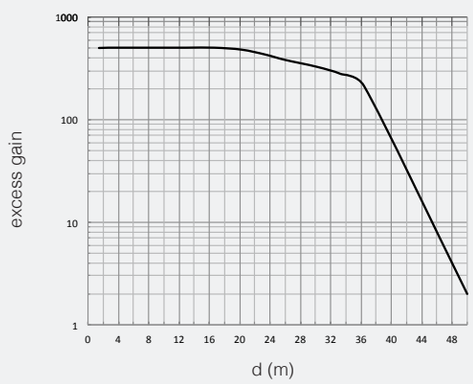

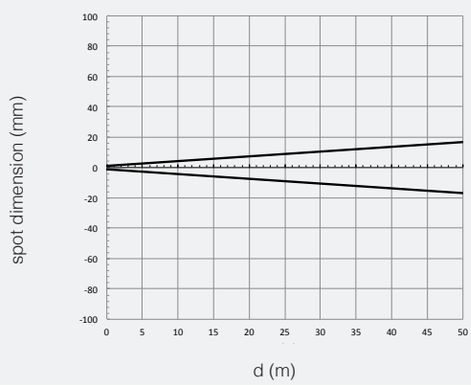

FALH/- 0*, FALD/**- 0* parallel displacement**

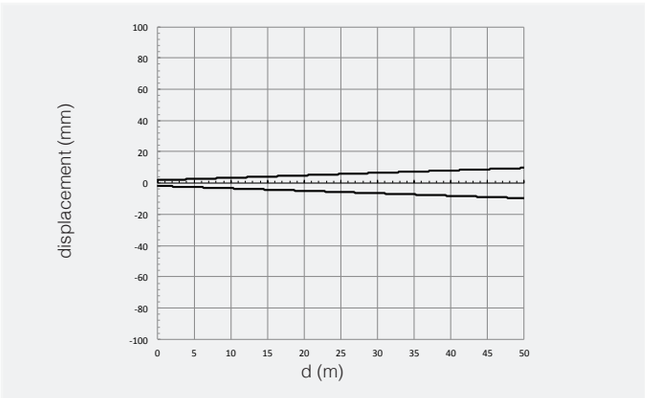

response diagram

direct diffuse models

FAL4/B*-0,1* excess gain

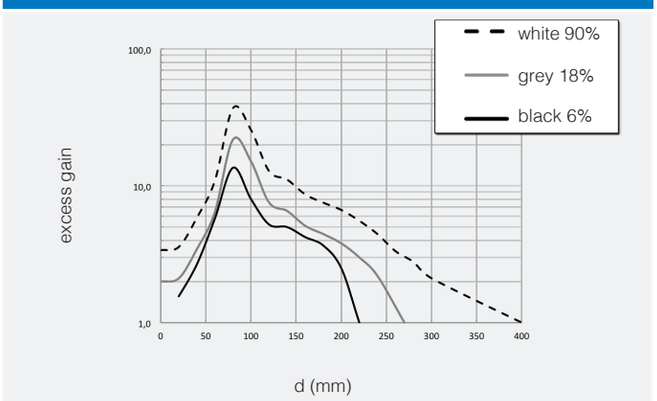

FAL4/B*-0,1* spot dimension

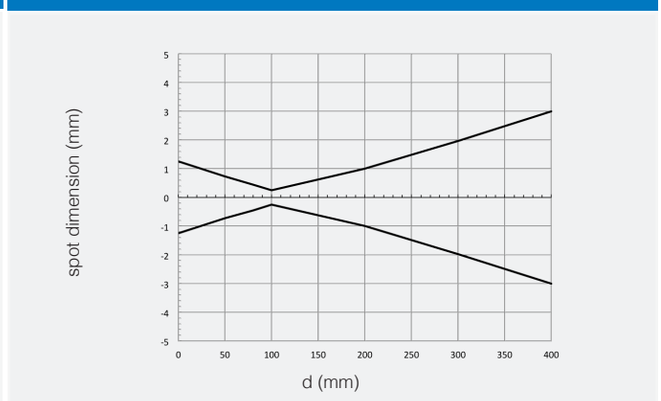

FAL4/B*-0,1* parallel displacement

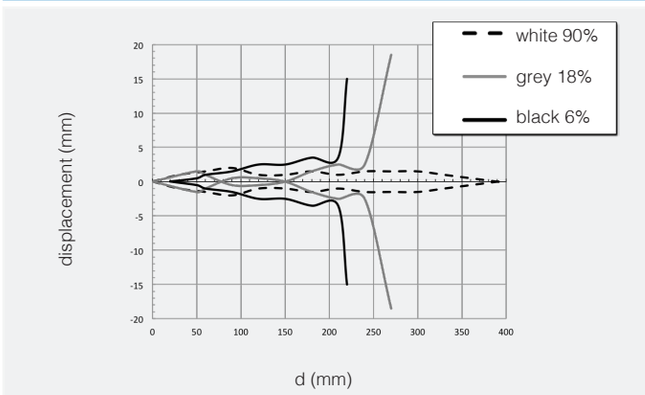

FAL4/B*-2,3* excess gain

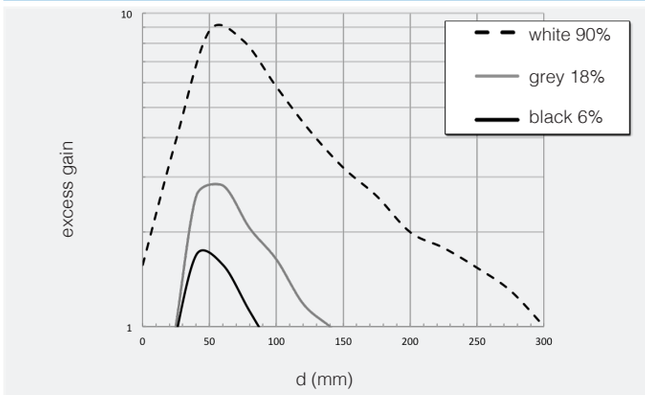

FAL4/B*-2,3* spot dimension

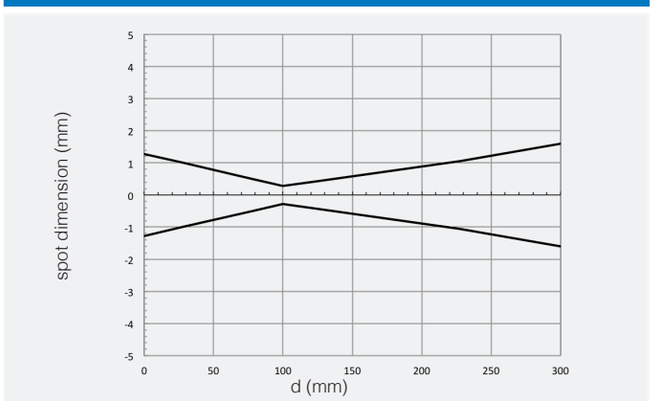

FAL4/B*- 2,3* parallel displacement

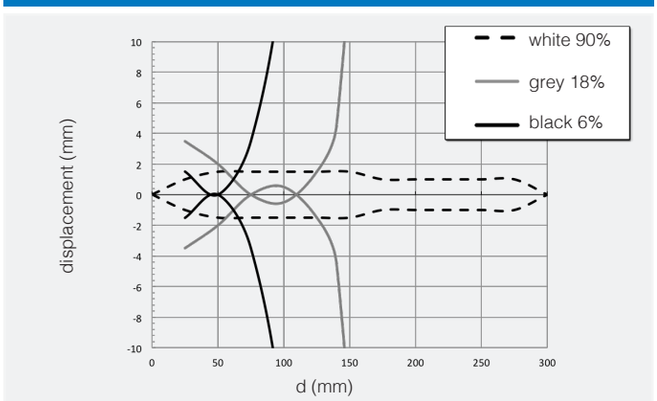

response diagram

polarized models

FALN/**-** excess gain

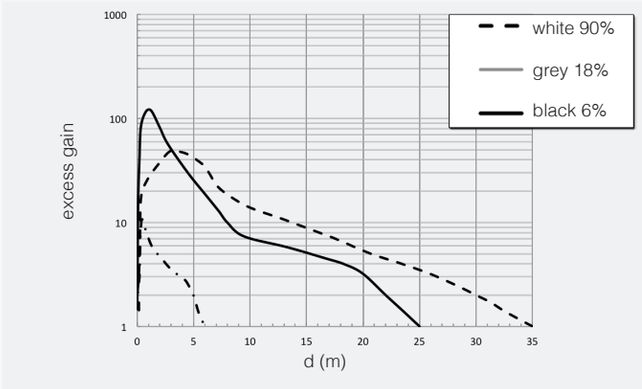

FALN/**-** spot dimension

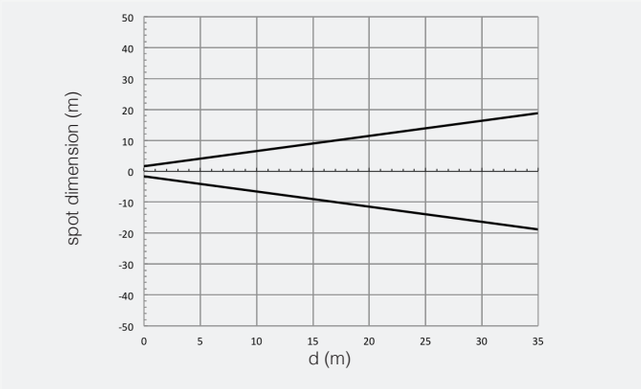

FALN/**-** parallel displacement

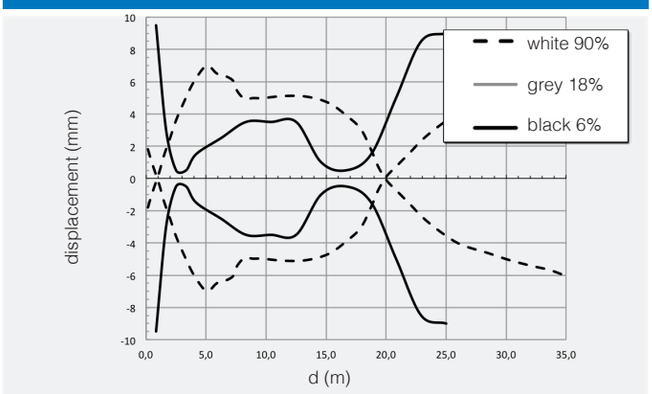

dimensions (mm)

FAL*/**-0A; FAL*/**-1A	FAL*/**-0E; FAL*/**-1E	FAL*/**-2A; FAL*/**-3A	FAL*/**-2E; FAL*/**-3E
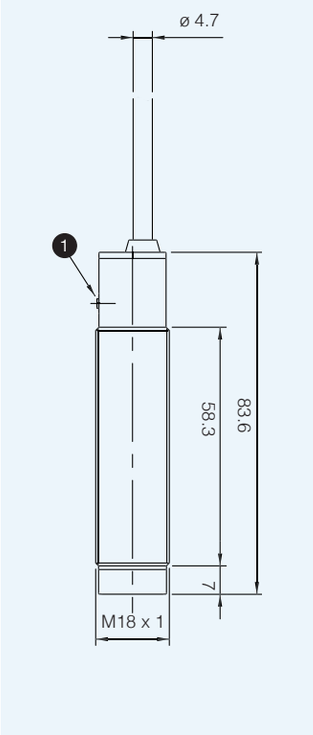	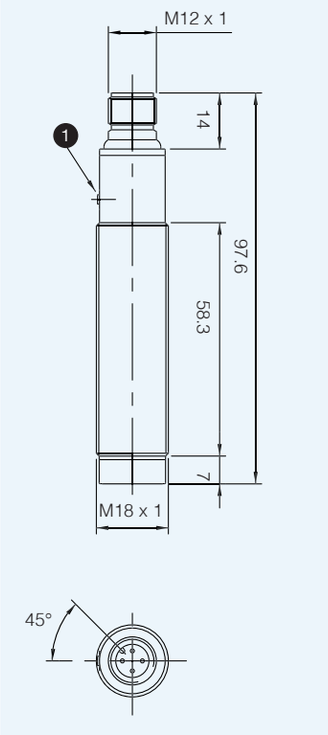	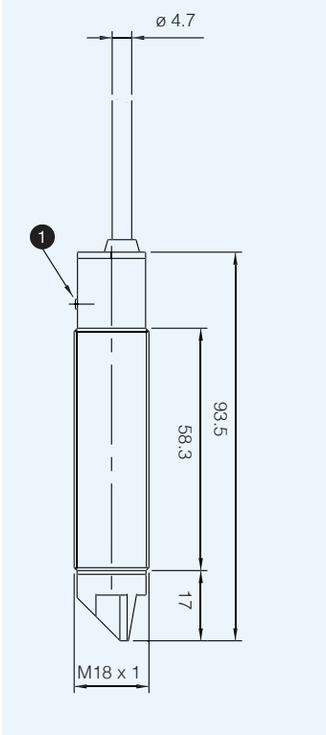	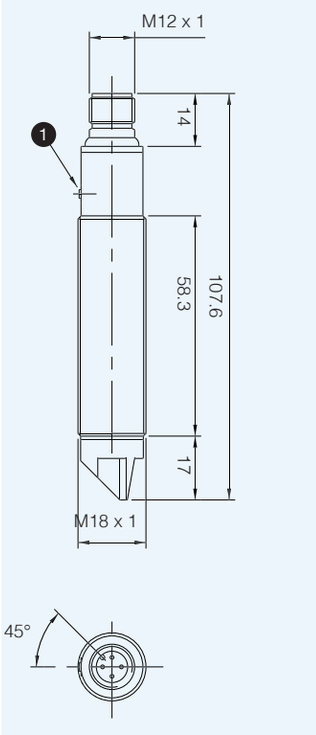

1 Button for sensitivity adjustment

dimensions (mm)

accessories included in all plastic models

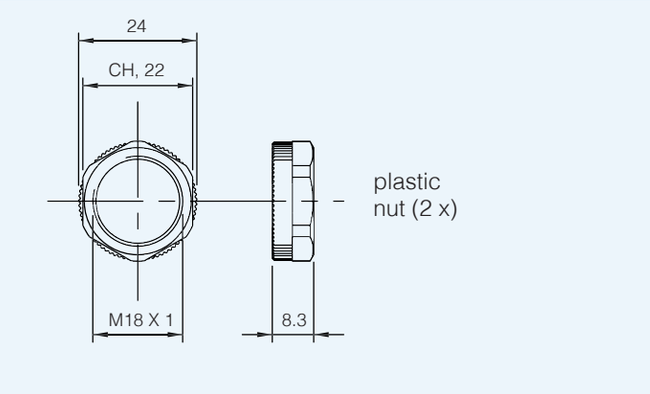

dimensions (mm)

accessories included in all metallic models

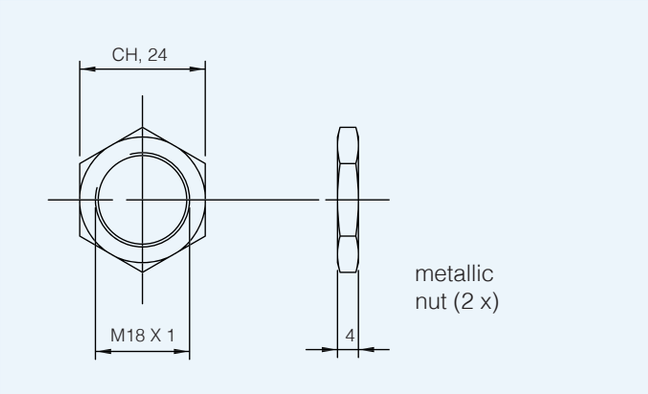

notes

FAL BGS series

M18 LASER with adjustable background suppression

features

- **M18 Photoelectric sensor Background Suppression with Laser emission**
- **Models in Class I and Class II Laser emission power**
- **Axial and Right angle optic materials**
- **Sensing distance adjustment by trimmer**
- **Collimated Light spot**
- **Complete protection against electrical damages**
- **Nichel brass housing**

web contents

- **Application notes**
- **Photos**
- **Catalogue / Manuals**

code description

FA L W / B P - 1 E 77

series	FA	M18 Cilindrical photelectric sensor
emission	L	Laser emission
background suppression	S	Background Suppression (Laser Class 1)
	W	Background Suppression (Laser Class 2)
output	0	Lo/Do selectable output
	B	Complementary output (NO+NC)
NPN / PNP output	N	NPN output
	P	PNP output
housing	1	Axial version Metallic housing
	3	Right Angle (90°) version Metallic housing
plug	E	Connector M12 4 pins
version	77	Special version (Anti Reflex)

available models

model	distance (mm)	laser class	optical	output selectable (LO/DO)		complementary output (NO+NC)	
				NPN	PNP	NPN	PNP
background suppression	30...100	1	axial	FALS/0N-1E	FALS/0P-1E	FALS/BN-1E	FALS/BP-1E
	30...80		right angle	FALS/0N-3E	FALS/0P-3E	FALS/BN-3E	FALS/BP-3E
	30...150	2	axial	FALW/0N-1E	FALW/0P-1E	FALW/BN-1E	FALW/BP-1E
	30...130		right angle	FALW/0N-3E	FALW/0P-3E	FALW/BN-3E	FALW/BP-3E
	30...120		axial	-	-	FALW/BN-1E77	FALW/BP-1E77
	30...100		right angle	-	-	FALW/BN-3E77	FALW/BP-3E77

technical specification

according to IEC EN 60947-5-2

	axial	radial	axial	radial	
	FALS/**-**	FALS/**-**	FALW/**-**	FALW/**-**	
nominal sensing distance	25...100 mm	25...80 mm	25...150 mm	25...130 mm	
sensing range (Sd)	30...100 mm	30...80 mm	30...150 mm	30...130 mm	
emission	red laser diode (650 nm)				
Laser Protection Class EN60852-1	1		2		
adjustment	trimmer (270°)				
hysteresis	10 %				
repeatability	10 %				
operating voltage	10...30 Vdc				
ripple	≤ 10 %				
no-load current	≤ 40 mA				
output current	100 mA				
leakage current	≤ 10 µA (Vdc max)				
output voltage drop	2 V max. IL = 100 mA				
output type	NPN or PNP; NO + NC or LO/DO selectable				
switching frequency	1.5 kHz				
power on delay	250 ms				
power supply protections	polarity reversal, transient				
output protection	short cirrcuit (auto reset), over voltage pulses				
temperature range	- 10°C...+ 50°C				
temperature drift	10 % Sn				
max. Capacitive Load	500 nF				
protection degree	IP67 (EN60529)[1]				
external light interference	15,000 lux (incandescent lamp)				
EMC	in conformity with the EMC Directive according to EN 60947-5-2				
LED indicator	yellow (output sate)				
housing material	nickel plated brass				
optic materials	PMMA ABS	glass ABS		PMMA ABS	glass ABS
exit plug	grilamid (PA 12)				
tightening torque	40 Nm (metallic)				
weight	60 g				

[1] Protection guaranteed only with plug cable well mounted

electric diagrams of the connections

NPN NO + NC

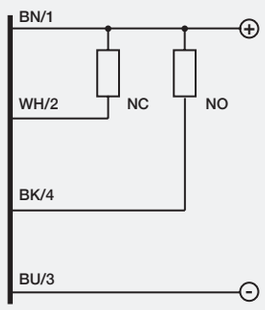

PNP NO + NC

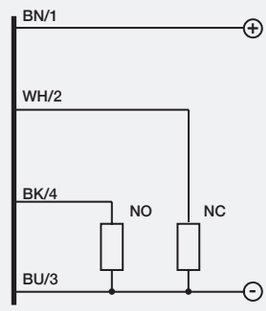

NPN LO/DO

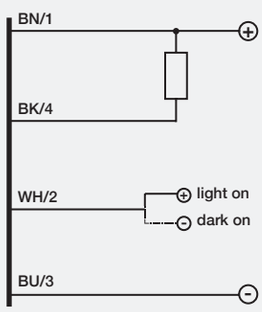

PNP LO/DO

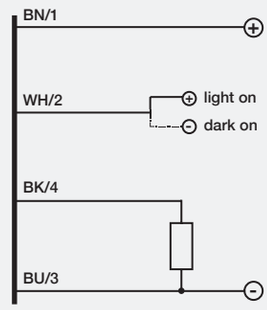

BN	brown
BU	blue
BK	black
WH	white
PK	pink
GY	gray

plug

M12 FAL*/0*-**

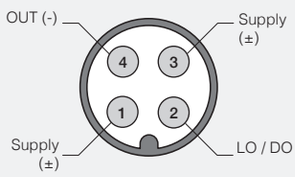

M12 FAL*/B*-**

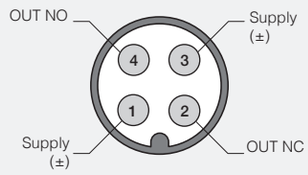

response diagram

FALS/**-1E reduction of sensing distance

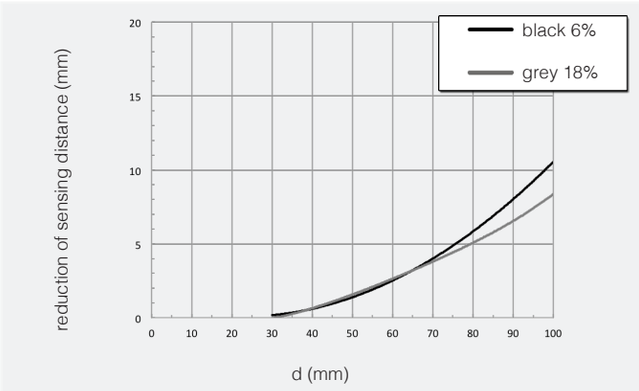

FALS/**-3E reduction of sensing distance

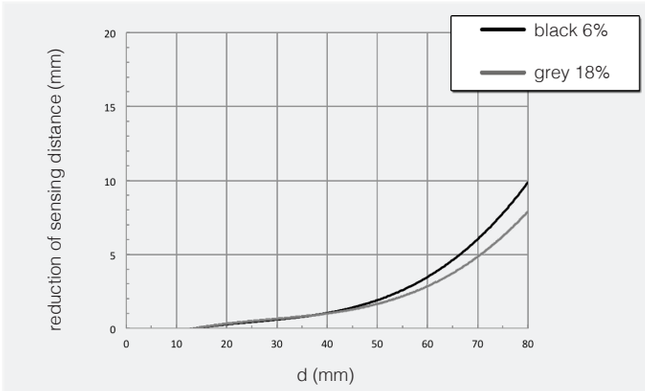

FALW/**-1E reduction of sensing distance

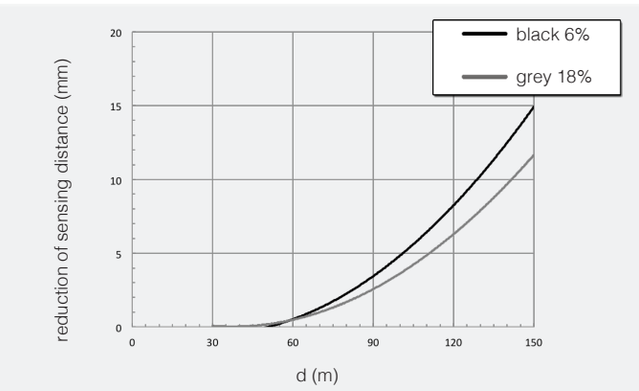

FALW/**-3E reduction of sensing distance

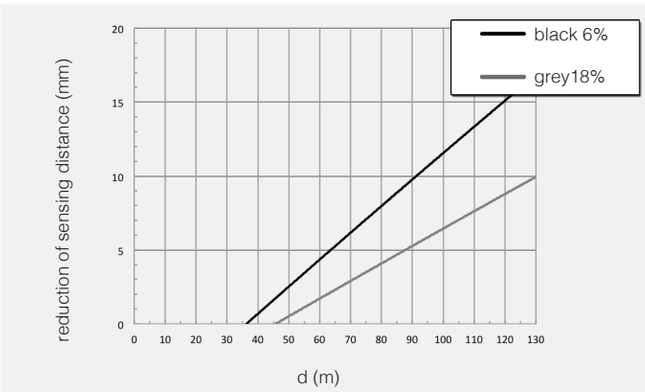

FALS/**-** spot dimension

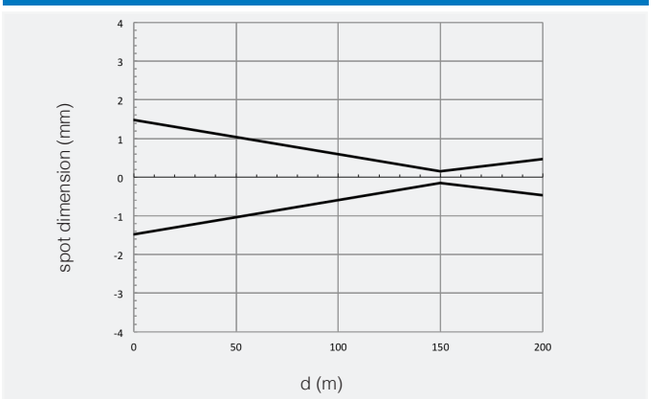

dimensions (mm)

FALS/**-1E; FALW/**-1E	FALS/**-3E; FALW/**-3E
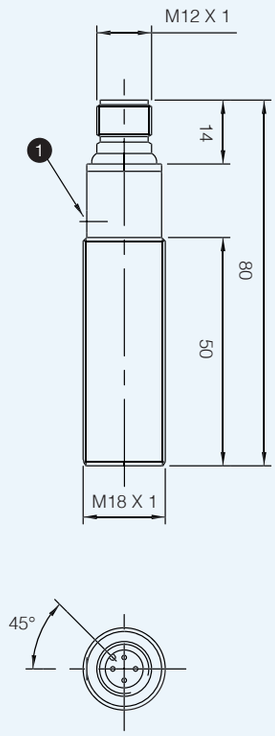	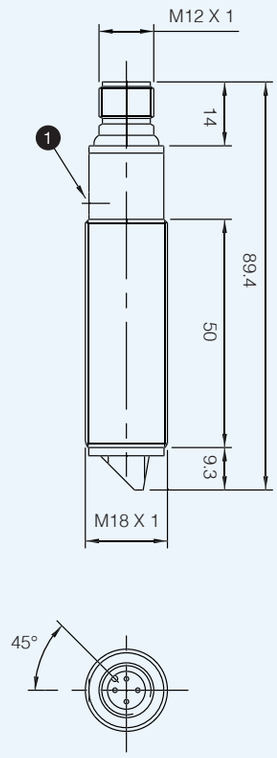

1 Trimmer

dimensions (mm)

accessories included in all models

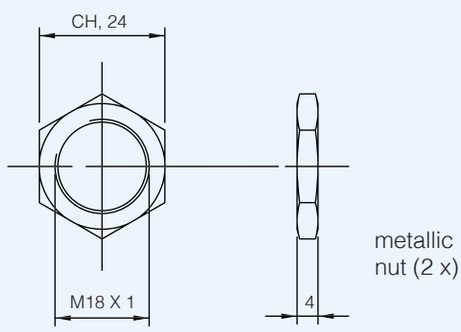

notes

SS - SP series

M18 DC with lateral adjustment

features

- **Models with side sens. adjustment on axial and right angle optic**
- **LO/DO selectable output**
- **ATEX models, cat. 3, available on request**
- **LED status indicator for all versions**
- **Complete protection against electrical damages**
- **IP67 protection degree for all models**
- **Approvals: CE and cULus listed**

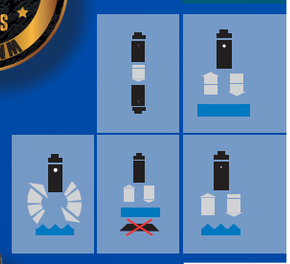

M18 DC with lateral adjustment

web contents

- **Application notes**
- **Photos**
- **Catalogue / Manuals**

code description (*)

background suppression

SS 0 / 0 N - 0 A

series	SS	M18 photoelectric sensors with axial optic
type	0	50 mm background suppr. without sens. adjust.
	1	100 mm background suppr. without sens. adjust.
	T	Focalizer background suppr. 12 mm (with focalizer STF-12) - 25 mm (with focalizer STF-25)
output	0	LO/DO selectable output
	L	3 wires – light on
	D	3 wires – dark on
NPN / PNP output	N	NPN output
	P	PNP output
housing material	0	Plastic housing
	1	Metallic housing
cable / plug exit	A	Axial cable exit 2 m
	E	M12 plug cable exit

(*) ATEX models available, contact our Sales Dept. for further information.

code description

diffuse reflection and retro-reflective

SS 2 / 0 N - 0 A

series	SS	M18 photoelectric sensors with axial optic
	SP	M18 photoelectric sensors with right angle optic
type	2	100 mm diffuse reflection without sens. adjust.
	3	100 mm diffuse reflection with sens. adjust.
	7	400 mm diffuse reflection with sens. adjust.
	8	800 mm diffuse reflection with sens. adjust.
	C	5 m retro-reflective without sens. adjust. (1)
	P	4 m polarized retro-reflective without sens. adjust. (1)
output	0	LO/DO selectable output
	L	3 wires - light on
	D	3 wires - dark on
NPN / PNP output	N	NPN output
	P	PNP output
housing material	0	Plastic housing
	1	Metallic housing
cable / plug oitput	A	Axial cable exit
	E	M12 plug cable exit
		Standard version
	3X	Retro-reflective and polarized with sens. adjust.

(1) Special version with sens. adjust, 3X variant

code description

through beam

SS H / 0 0 - 0 A

series	SS	M18 photoelectric sensors with axial optic
	SP	M18 photoelectric sensors with right angle optic
type	H	14 m emitter without sens. adjust.
	Z	14 m receiver without sens. adjust.
	D	14 m receiver with sens. sdjust.
	U	Emitter with reduced visible beam
	G	8 m receiver for small object
	V	3 m receiver for ultra small object
features	0	Emitter without check - LO/DO selectable
	X	Emitter with check
	L	3 wires – light on - S*D and S*Z only
	D	3 wires–dark on - S*D and S*Z only
	A	3 wires – light on - S*G and S*V only
	C	3 wires–dark on - S*G and S*V only
NPN / PNP output	0	Emitter
	N	NPN output
	P	PNP output
housing material	0	Plastic housing
	1	Metallic housing
cable / plug exit	A	Axial cable exit
	E	M12 plug cable exit - S*H, S*D and S*Z" versions only
	H	M12 plug cable exit - S*U, S*G and S*V versions only

available models

plug exit photoelectric sensors axial optic

function	distance	housing	adjustment	3 wires LO NPN	3 wires LO PNP	3 wires DO NPN	3 wires DO PNP	3 wires NPN LO / DO	3 wires PNP LO / DO
background suppression	50 mm	plastic	-	-	SS0/LP-0E	-	-	SS0/0N-0E	SS0/0P-0E
		metallic		-	SS0/LP-1E	-	-	SS0/0N-1E	SS0/0P-1E
	100 mm	plastic		-	SS1/LP-0E	-	-	SS1/0N-0E	SS1/0P-0E
		metallic		-	SS1/LP-1E	-	-	SS1/0N-1E	SS1/0P-1E
	focalized	plastic		-	-	-	-	SST/0N-0E	SST/0P-0E
		metallic		-	-	-	-	SST/0N-1E	SST/0P-1E
diffuse reflection	100 m	plastic		SS2/LN-0E	SS2/LP-0E	-	-	SS2/0N-0E	SS2/0P-0E
			●	-	-	-	-	-	-
		metallic	-	SS2/LN-1E	SS2/LP-1E	-	-	SS2/0N-1E	SS2/0P-1E
			●	-	-	-	-	-	SS3/0P-1E
	400 mm	plastic		-	SS7/LP-0E	-	-	SS7/0N-0E	SS7/0P-0E
		metallic		-	SS7/LP-1E	-	-	SS7/0N-1E	SS7/0P-1E
	800 mm	plastic		-	-	-	-	-	SS8/0P-0E
		metallic		-	-	-	-	-	SS8/0P-1E
retro-reflective	4 m	plastic	-	SSC/LN-0E	SSC/LP-0E	SSC/DN-0E	SSC/DP-0E	SSC/0N-0E	SSC/0P-0E
			●	-	-	-	-	SSC/0N-0E3X	SSC/0P-0E3X
		metallic	-	SSC/LN-1E	SSC/LP-1E	SSC/DN-1E	SSC/DP-1E	SSC/0N-1E	SSC/0P-1E
			●	-	-	-		SSC/0N-1E3X	SSC/0P-1E3X
polarized	3 m	plastic	-	SSP/LN-0E	SSP/LP-0E	SSP/DN-0E	SSP/DP-0E	SSP/0N-1E	SSP/0P-1E
			●	-	-	-	-	SSP/0N-1E3X	SSP/0P-1E3X
		metallic	-	SSP/LN-1E	SSP/LP-1E	SSP/DN-1E	SSP/DP-1E	SSP/0N-1E	SSP/0P-1E
			●	-	-	-	-	SSP/0N-1E3X	SSP/0P-1E3X
through-beam	14 m	plastic	emitter	SSH/00-0E					
			em. with check	SSH/X0-0E					
			receiver	SSZ/LN-0E	SSZ/LP-0E	SSZ/DN-0E	SSZ/DP-0E	SSZ/0N-0E	SSZ/0P-0E
			receiver adj.	SSD/LN-0E	SSD/LP-0E	SSD/DN-0E	SSD/DP-0E	SSD/0N-0E	SSD/0P-0E
		metallic	emitter	SSH/00-1E					
			em. with check	SSH/X0-1E					
			receiver	SSZ/LN-1E	SSZ/LP-1E	SSZ/DN-1E	SSZ/DP-1E	SSZ/0N-1E	SSZ/0P-1E
			receiver adj.	SSD/LN-1E	SSD/LP-1E	SSD/DN-1E	SSD/DP-1E	SSD/0N-1E	SSD/0P-1E
	8 m	plastic	emitter	SSU/00-0E					
			receiver	SSG/AN-0E	SSG/AP-0E	SSG/CN-0E	SSG/CP-0E	-	-
		metallic	emitter	SSU/00-1H					
			receiver	SSG/AN-1H	SSG/AP-1H	SSG/CN-1E	SSG/CP-1H	-	-
	3 m	plastic	emitter	SSU/00-0E					
			receiver	SSV/AN-0E	SSV/AP-0E	SSV/CN-0E	SSV/CP-0E	-	-
		metallic	emitter	SSU/00-1H					
			receiver	-					

available models

cable exit photoelectric sensors axial optic

function	distance	housing	adjustment	3 wires LO NPN	3 wires LO PNP	3 wires DO NPN	3 wires DO PNP	4 wires NPN LO / DO	4 wires PNP LO / DO
background suppression	50 mm	plastic	-	-	-	-	-	SS0/0N-0A	SS0/0P-0A
		metallic		-	-	-	-	SS0/0N-1A	SS0/0P-1A
	100 mm	plastic		-	-	-	-	SS1/0N-0A	SS1/0P-0A
		metallic		-	-	-	-	SS1/0N-1A	SS1/0P-1A
	focalizzata	plastic		-	-	-	-	SST/0N-0A	SST/0P-0A
		metallic		-	-	-	-	SST/0N-1A	SST/0P-1A
diffuse reflection	100 m	plastic		SS2/LN-0A	SS2/LP-0A	-	SS2/DP-0A	SS2/0N-0A	SS2/0P-0A
			●	-	-	-	-	SS3/0N-0A	SS3/0P-0A
		metallic	-	SS2/LN-1A	SS2/LP-1A	SS2/DN-1A	SS2/DP-1A	SS2/0N-1A	SS2/0P-1A
			●	-	-	-	-	SS3/0N-1A	SS3/0P-1A
	400 mm	plastic		-	-	-	-	SS7/0N-0A	SS7/0P-0A
		metallic		-	-	-	-	SS7/0N-1A	SS7/0P-1A
	800 mm	plastic		-	-	-	-	SS8/0N-0A	SS8/0P-0A
		metallic		-	-	-	-	SS8/0N-1A	SS8/0P-1A
retro-reflective	5 m	plastic	-	-	-	-	-	SSC/0N-0A	SSC/0P-0A
			●	-	-	-	-	SSC/0N-0A3X	SSC/0P-0A3X
		metallic	-	-	-	-	-	SSC/0N-1A	SSC/0P-1A
			●	-	-	-	-	SSC/0N-1A3X	SSC/0P-1A3X
polarized	4 m	plastic	-	-	-	-	SSP/DP-0A	SSP/0N-1A	SSP/0P-1A
			●	-	-	-	-	SSP/0N-1A3X	SSP/0P-1A3X
		metallic	-	-	-	-	SSP/DP-1A	SSP/0N-1A	SSP/0P-1A
			●	-	-	-	-	SSP/0N-1A3X	SSP/0P-1A3X
through-beam	14 m	plastic	emitter	SSH/00-0A					
			em. with check	SSH/X0-0A					
			receiver	SSZ/LN-0A	SSZ/LP-0A	SSZ/DN-0A	SSZ/DP-0A	SSZ/0N-0A	SSZ/0P-0A
			receiver adj.	-	-	-	-	SSD/0N-0A	SSD/0P-0A
		metallic	emitter	SSH/00-1A					
			em. with check	SSH/X0-1A					
			receiver	-	-	-	-	SSZ/0N-1E	SSZ/0P-1E
			receiver adj.	-	-	-	-	SSD/0N-1E	SSD/0P-1E
	8 m	plastic	emitter	SSU/00-0A					
			receiver	SSG/AN-0A	SSG/AP-0A	SSG/CN-0A	SSG/CP-0A	-	-
		metallic	emitter	SSU/00-1A					
			em. with check	SSU/X0-1A					
			receiver	SSG/AN-1A	SSG/AP-1A	SSG/CN-1A	SSG/CP-1A	-	-
	3 m	plastic	emitter	SSU/00-0A					
			em. with check	SSU/X0-0A					
			receiver	-	SSV/AP-0A	-	-	-	-
		metallic	emitter	SSU/00-1A					
			receiver	-	SSV/AP-1A	-	-	-	-

available models

plug exit photoelectric sensors radial optic

function	distance	housing	adjustment	3 wires LO NPN	3 wires LO PNP	3 wires DO NPN	3 wires DO PNP	4 wires NPN LO/DO	4 wires PNP LO/DO
diffuse reflection	100 mm	plasticc	-	SP2/LN-0E	SP2/LP-0E	-	-	SP2/0N-0E	SP2/0P-0E
			●	-	-	-	-	-	SP3/0P-0E
		metallic	-	SP2/LN-1E	SP2/LP-1E	-	-	SP2/0N-1E	SP2/0P-1E
			●	-	-	-	-	-	SP3/0P-1E
	400 mm	plastic		-	-	-	-	SP7/0N-0E	SP7/0P-0E
	800 mm			-	-	-	-	-	SP8/0P-0E
		metallic		-	-	-	-	-	SP8/0P-1E
through-beam	14 m	plastic	emitter	SPH/00-0E					
			receiver with check	-	-	-	-	SPZ/0N-0E	SPZ/0P-0E
		metallic	emitter	SPH/00-1E					
	8 m	plastic		SPU/00-0E					
	3 m	metallic		SPU/00-1E					

available models

cable exit photoelectric sensors radial optic

function	distance	housing	adjustment	3 wires LO NPN	3 wires LO PNP	3 wires DO NPN	3 wires DO PNP	3 wires NPN LO/DO	3 wires PNP LO/DO
diffuse reflection	100 mm	metallic	●	-	-	SP3/DN-1A	-	-	-
	400 mm	plastic		-	-	-	-	SP7/0N-0A	SP7/0P-0A
		metallic		-	-	-	-	SP7/0N-1A	SP7/0P-1A
through-beam	14 m	plastic	emitter	SPH/00-0A					
			em. with check	SPH/X0-0A					
			receiver	-	-	-	-	SPZ/0N-0A	SPZ/0P-0A
		metallic	emitter	SPH/00-1A					
			em. with check	SPH/X0-1A					
			receiver	-	-	-	-	SPZ/0N-1A	SPZ/0P-1A
	3 m		emitter	SPU/00-1A					

technical specification

background suppression models

	SS0/**-**	SS1/**-**	SST/**-**
nominal sensing distance	50 mm	100 mm	12/25 mm
emission	red (660 nm)		
spot diameter	see diagram		
minimum detectable object	1 mm	3.5 mm	0.1 mm with STF-12 0.25 mm with STF-25
dfferential travel	≤ 10 %		
repeatability	5 %		
operating voltage	10...30 Vdc		
ripple	≤ 10 %		
supply current	≤ 30 mA		
load current	100 mA		
leakage current	10 µA		
output voltage drop	1.2 V max. IL = 100 mA		
output type	NPN or PNP - LO/DO selectable		
switching frequency	1 kHz		
power on delay	200 ms		
power supply protections	polarity reversal, transient		
output protection	short circuit (autoreset)		
operating temperature range	- 25°C...+ 70°C (without freeze)		
temperature drift	10 % Sr		
protection degree	IP67 (EN60529) [1]		
EMC	in conformity with the EMC Directive according to EN 60947-5-2		
external light interference	3,000 lux (incandescence lamp) 10,000 lux (sunligh)		
LEDs	yellow		
housing material	PBT (plastic) / nicked plated brass (metallic) / PC (cable exit))		
optic material	plastic		
tightening torque	25 Nm (metallic housing), 1 Nm (plastic housing)		
weight (approx)	plastic version: 30 g connector / 70 g cable metallic version: 100 g connector / 130 g cable		

[1] Protection guaranteed only with plug cable well mounted

technical specification

diffuse reflection and retro-reflective models

	diffuse reflection				retro-reflective	polarized
	S*2/**-**	S*3/**-**	S*7/**-**	S*8/**-**	S*C/**-****	S*P/**-****
nominal sensing distance	with white target 100 x 100 mm		400 mm with white target 200 x 200 mm	800 mm with white target 400 x 400 mm	5 m with reflector RL 110	4 m with reflector RL 110
emission	infrared (880 nm)					red (660 nm)
dfferential travel	≤ 10 %					
repeatability	5 %					
operating voltage	10...30 Vdc					
ripple	≤ 10 %					
supply current	30 mA					
load current	100 mA					
leakage current	10 µA					
output voltage drop	1.2 V max. IL = 100 mA					
output type	NPN or PNP - LO/DO selectable					
switching frequency	250 Hz					
power on delay	200 ms					
power supply protections	polarity reversal, transient					
output protection	short circuit (autoreset)					
sensibility adjustment	-	●			-	●
operating temperature range	- 25°C...+ 70°C (without freeze)					
temperature drift	10 % Sr					
protection degree	IP67 (EN60529) [1]					
EMC	in conformity with the EMC Directive according to EN 60947-5-2					
external light interference	3,000 lux (incandescence lamp), 10.000 lux (sunligh)					
LEDs	yellow					
housing material	PBT (plastic) / nicked plated brass / PC (cable exit)					
optic material	plastic					
tightening torque	1 Nm (plastic housing), 25 Nm (metal housing)					
weight (approx)	plastic version: 30 g connector / 70 g cable metallic version: 100 g connector / 130 g cable					

[1] Protection guaranteed only with plug cable well mounted

technical specification

through beam models

	standard beam			barrier for small and ulta-small objects		
	emitter	receiver	receiver	emitter	receiver	receiver
	S*H/*0-**	S*Z/**-**	S*D/**-**	S*U/*0-**	S*G/**-**	S*V/**-**
nominal sensing distance	14 m			-	8 m	3 m
minimum detectable object	-				Ø 4 mm	Ø 1 mm
emission	red (660)					
tolerance	-			90% - 200% @ Eg = 1,5		
dfferential travel	≤ 10 %					
repeatability	5 %					
operating voltage	10...30 Vdc					
ripple	≤ 10 %					
supply current	40 mA	30 mA		25 mA	20 mA	
load current	100 mA					
leakage current	10 µA					
output voltage drop	2.5 V max. IL = 100 mA					
output type	NPN or PNP - LO/DO selectable			NPN or PNP - NO or NC		
switching frequency	250 Hz					
power on delay	200 ms					
power supply protections	polarity reversal, transient					
output protection	short circuit (autoreset)					
sensibility adjustment	-	●	-			
operating temperature range	- 25°C...+ 75°C (without freeze)					
temperature drift	10 % Sr			≤ 10 % Sr		
protection degree	IP67 (EN60529) [1]					
EMC	in conformity with the EMC Directive according to EN 60947-5-2					
external light interference	3,000 lux (incandescent lamp), 10,000 lux (sunlight)					
LEDs	yellow			red (activated output)		
housing material	PBT (plastic) / nicked plated brass / PC (cable exit)					
optic material	plastic					
tightening torque	1 Nm (plastic housing), 25 Nm (metallic housing)					
weight (approx)	plastic version: 30 g connector / 70 g cable metallic version: 100 g connector / 130 g cable					

[1] Protection guaranteed only with plug cable well mounted

electrical diagrams of the connections

S**/0N-**	S**/0P-**	S**/*N-** (3 wires NPN)
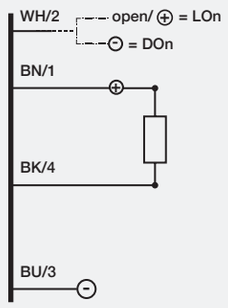	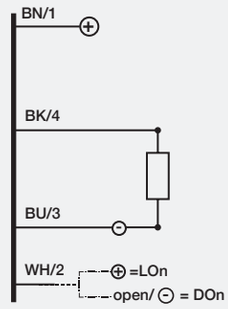	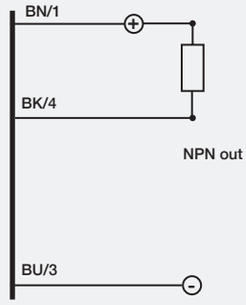

S**/*P-** (3 wires PNP)	S**/00-**	S*H/X0-**
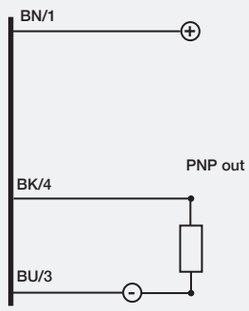	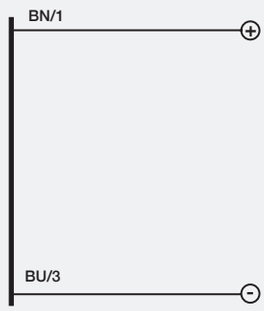	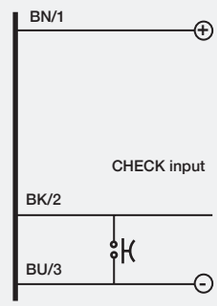

BN	brown
BU	blue
BK	black
WH	white
PK	pink
GY	grey

plug

M12 diffuse reflection polarized receiver	M12 emitter with check	M12 emitter without check
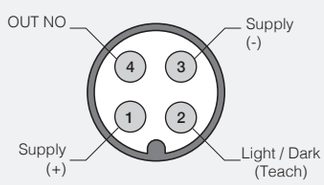	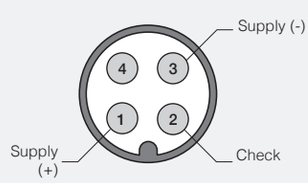	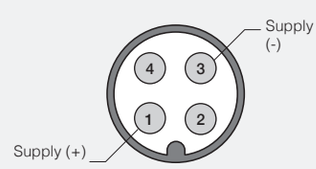

response diagrams

background suppression models

SS0/**-** excess gain

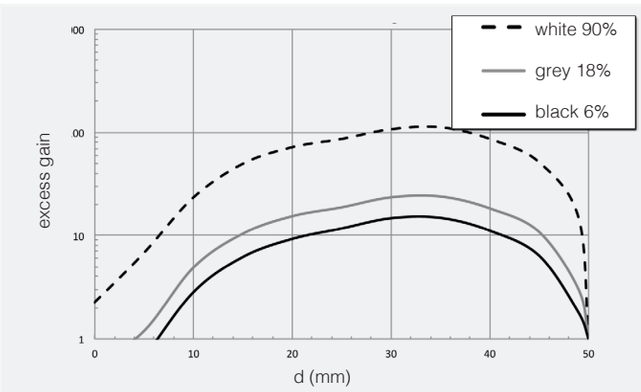

SS0/**-** spot dimension

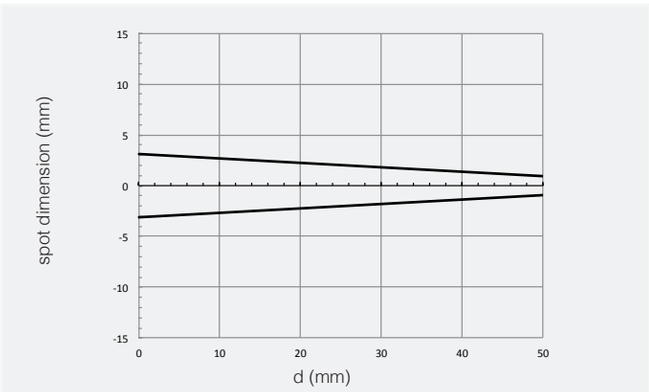

SS0/**-** parallel displacement

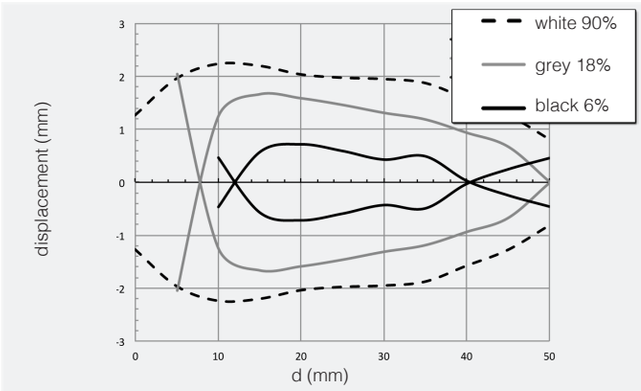

SS1/**-** excess gain

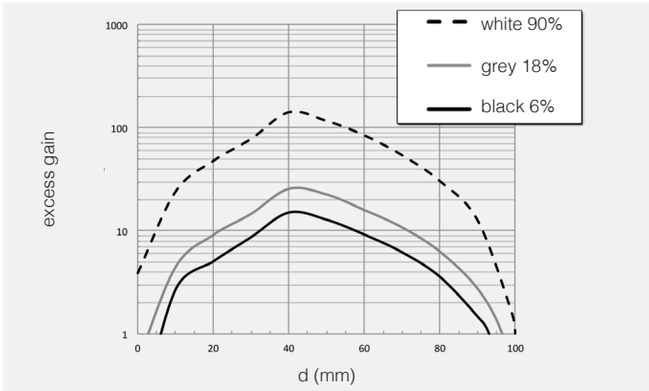

SS1/**-** spot dimension

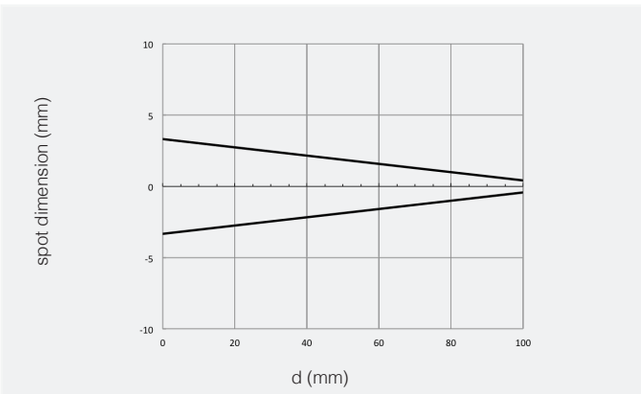

SS1/**-** parallel displacement

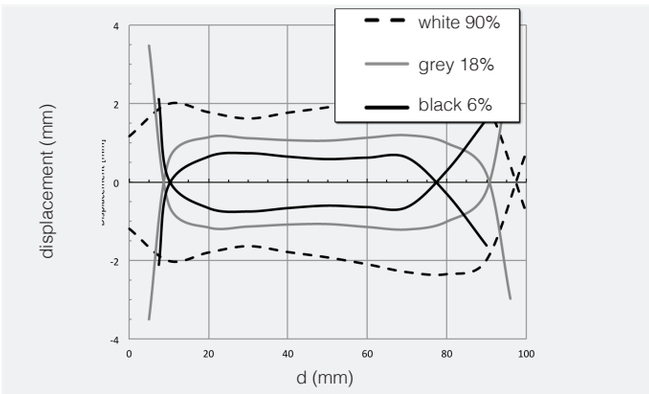

S*T/**-** + STF-12 excess gain

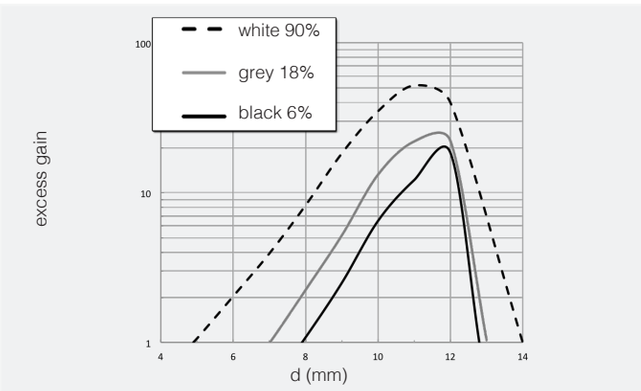

S*T/**-** + STF-12 spot dimension

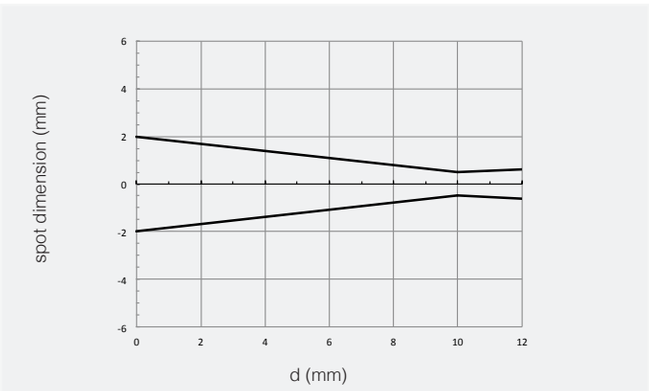

S*T/**-** + STF-12 parallel displacement

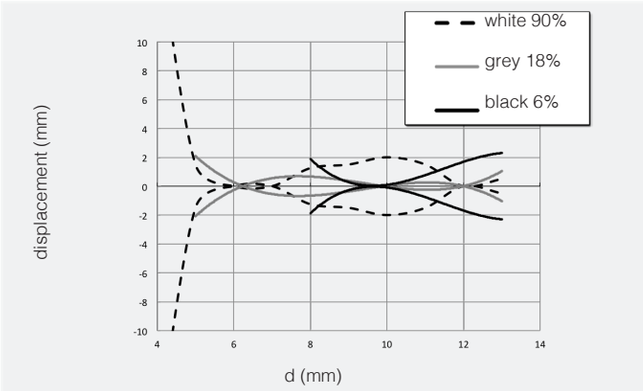

S*T/**-** + STF-25 excess gain

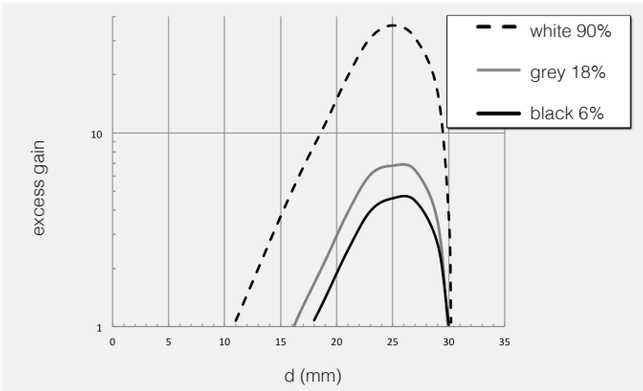

S*T/**-** + STF-25 spot dimension

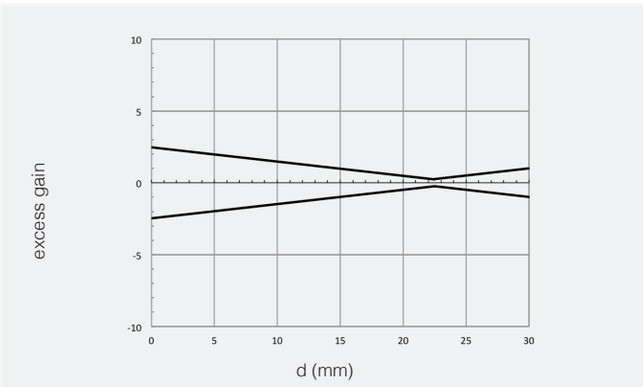

S*T/**-** + STF-25parallel displacementnt

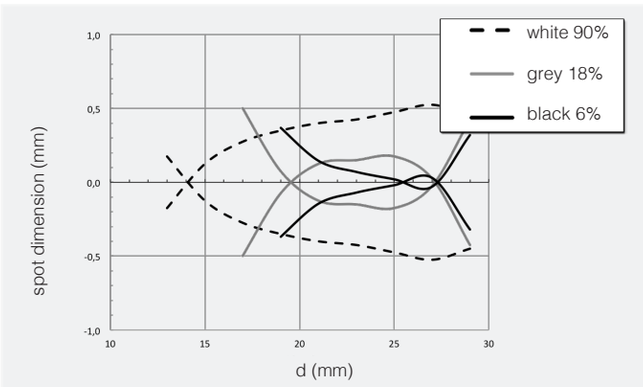

response diagrams

retro-reflective models

SS2,SS3/**-** excess gain

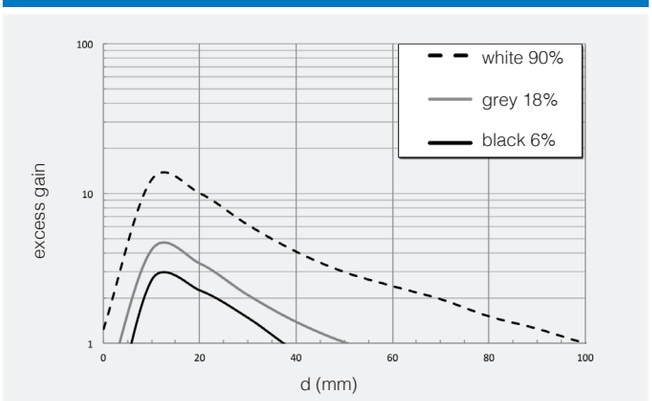

SS2,SS3//**-** spot dimension

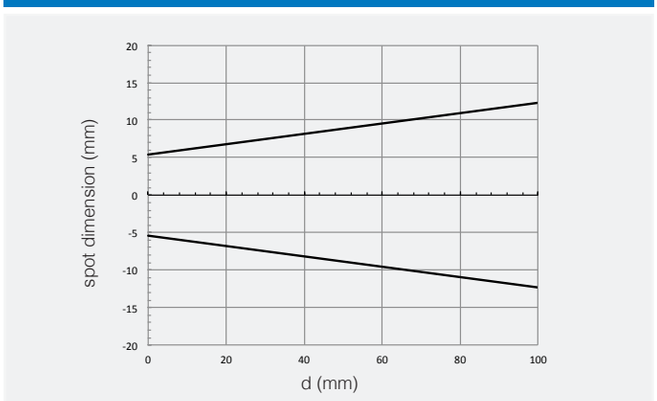

SS2,SS3//**-** parallel displacement

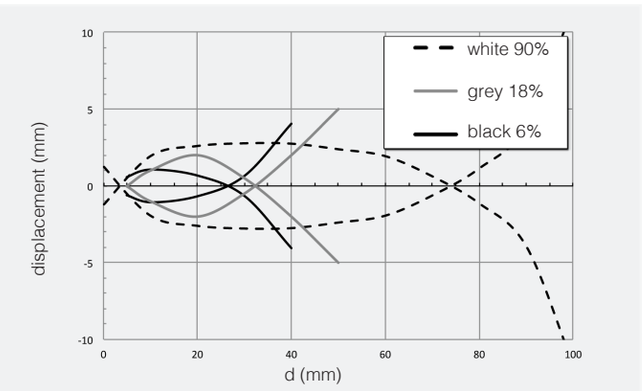

SS6,SS7/**-** excess gain

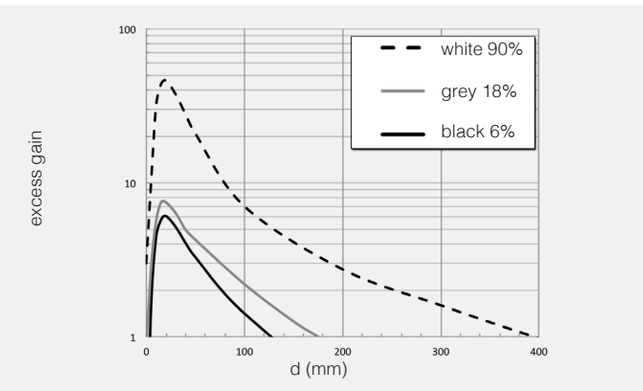

response diagrams

retro-reflective models

SS6/**-**,SS7/**-** spot dimension

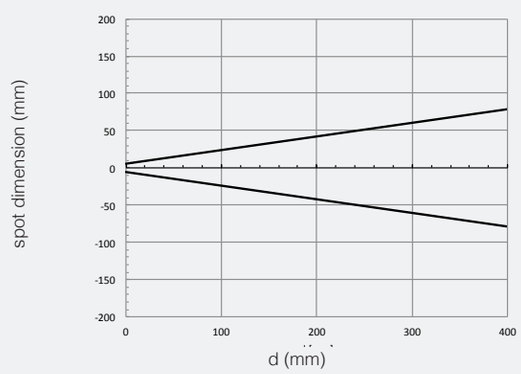

SS6/**-**,SS7/**-** parallel displacement

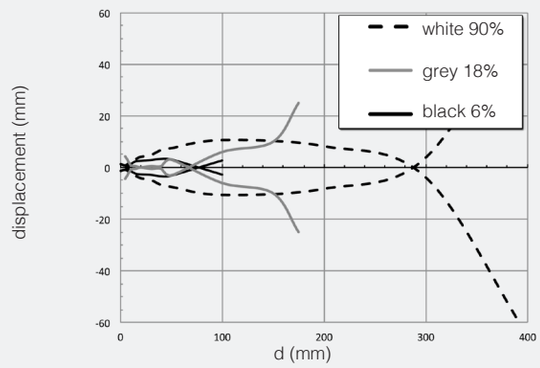

SS8/**-** excess gain

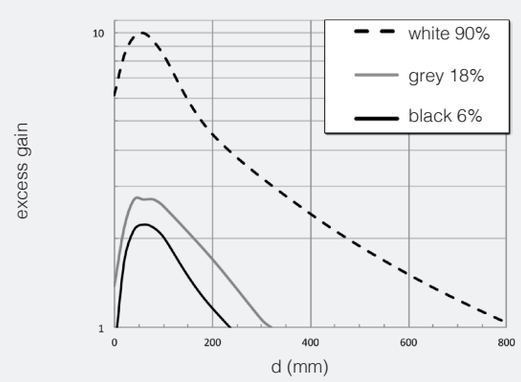

SS8/**-** spot dimension

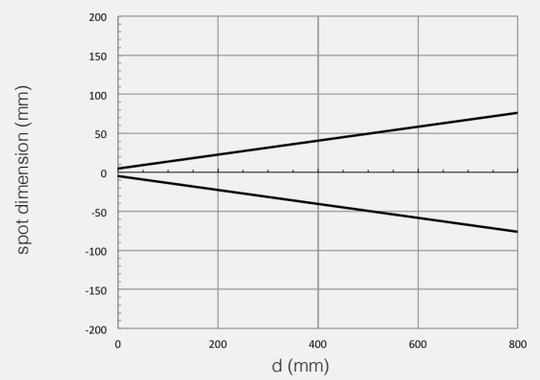

SS8/**-** parallel displacement

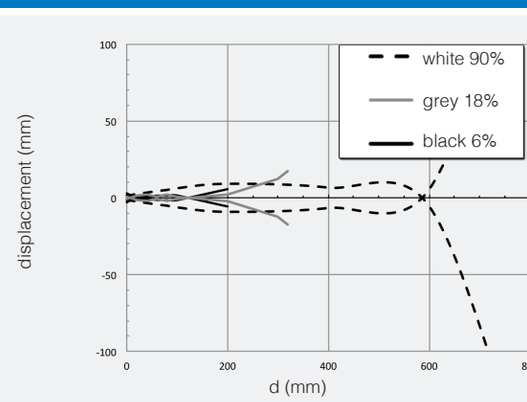

response diagrams

retro-reflective models (diagrams measured using RL100)

SSC/-** excess gain**

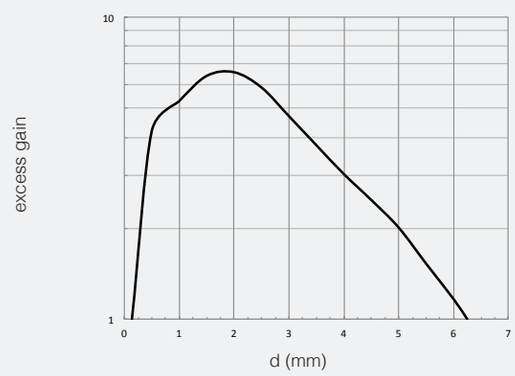

SSC/-** spot dimension**

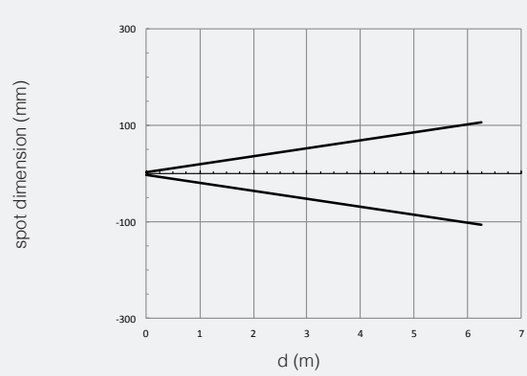

SSC/-** parallel displacement**

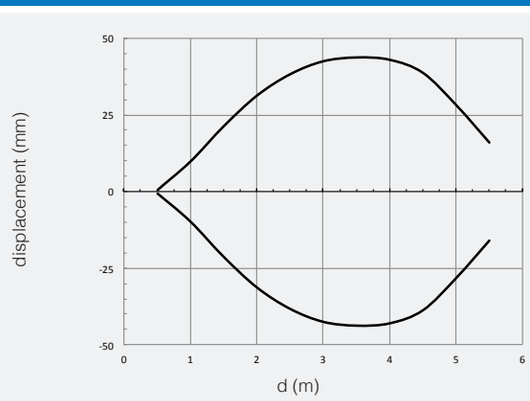

response diagrams

polarized models (diagrams measured using RL100)

S*P/-** excess gain**

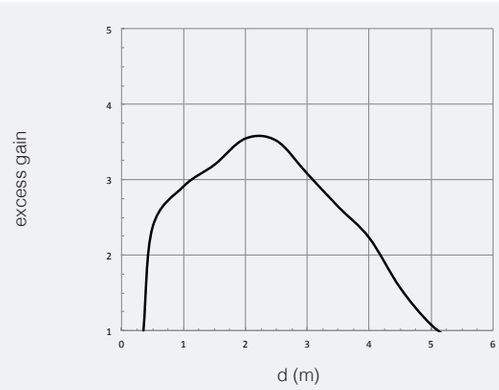

S*P/-** spot dimension**

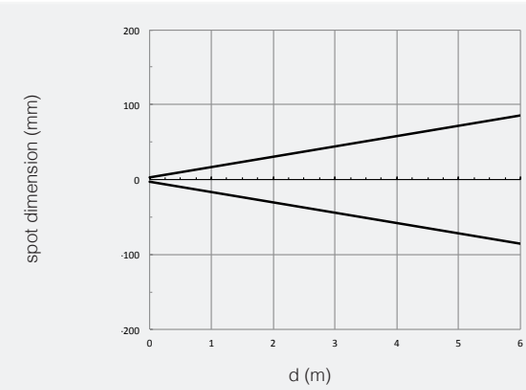

response diagrams

polarized models (diagrams measured using RL100)

S*P/-** parallel displacement**

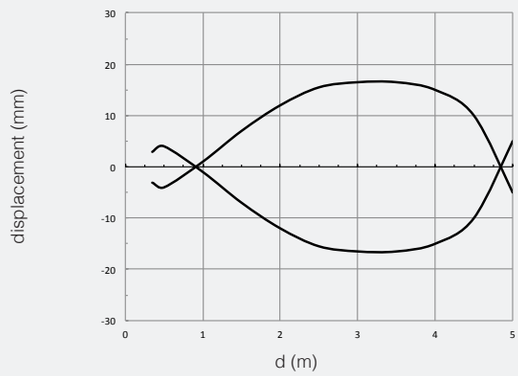

response diagrams

through beam models

S*H/-(0,1)*, S*D/**-(0,1)* excess gain**

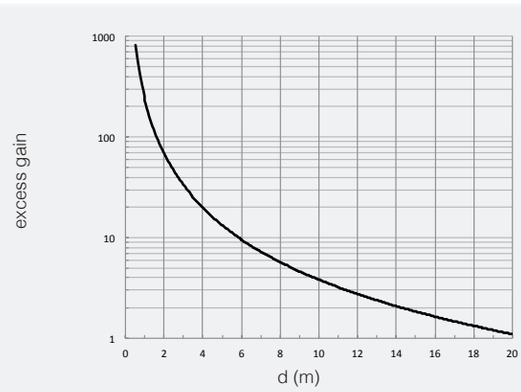

S*H/-(0,1)*, S*D/**-(0,1)* spot dimension**

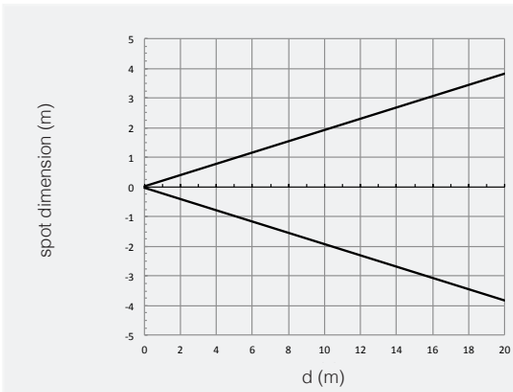

S*H/-(0,1)*, S*D/**-(0,1)* parallel displacement**

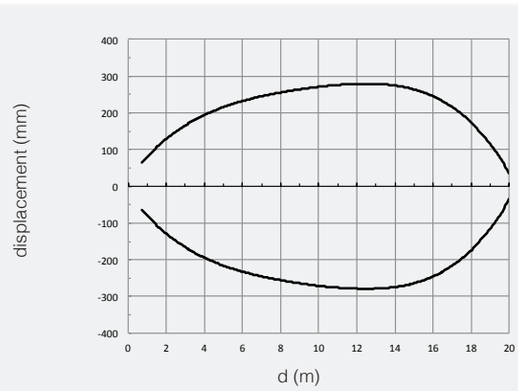

S*U/-**, S*G/**-** excess gain**

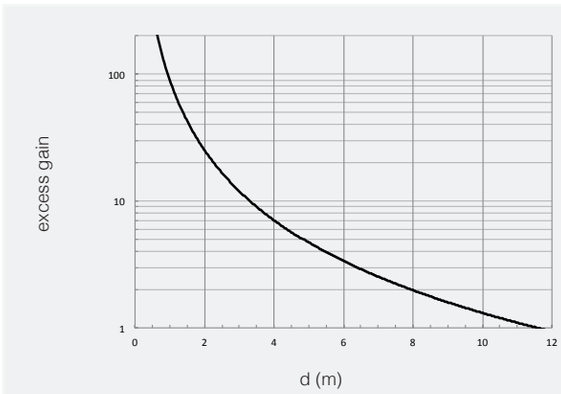

S*U/-**, S*G/**-** spot dimension**

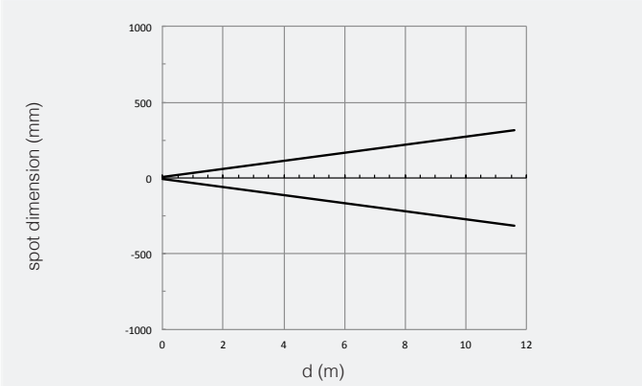

S*U/-**, S*G/**-** parallel displacement**

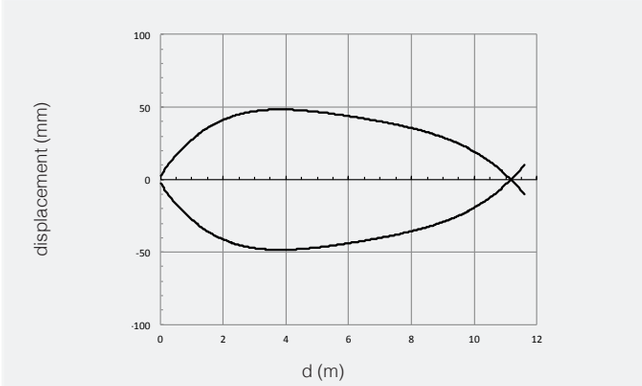

S*U/-** S*V/**-** excess gain**

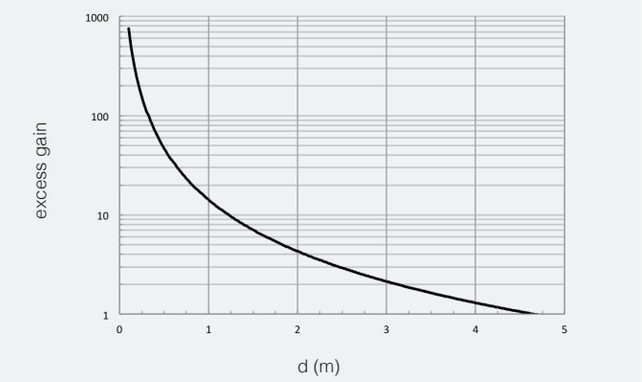

S*U/-** S*V/**-** excess gain**

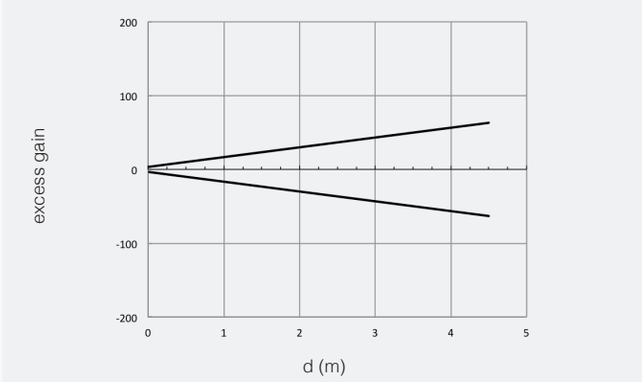

S*U/-** S*V/**-** spot dimension**

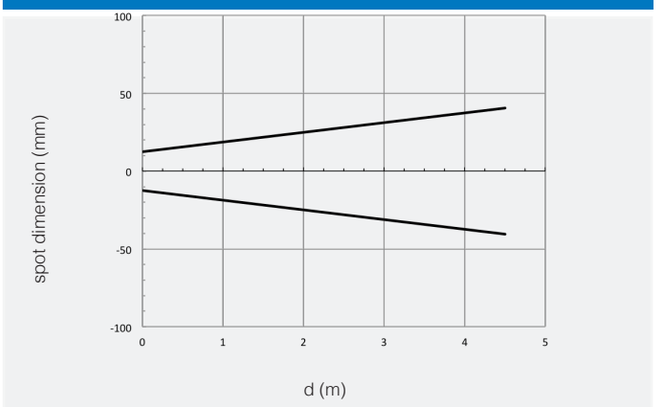

dimensions (mm)

SP*/-*A**

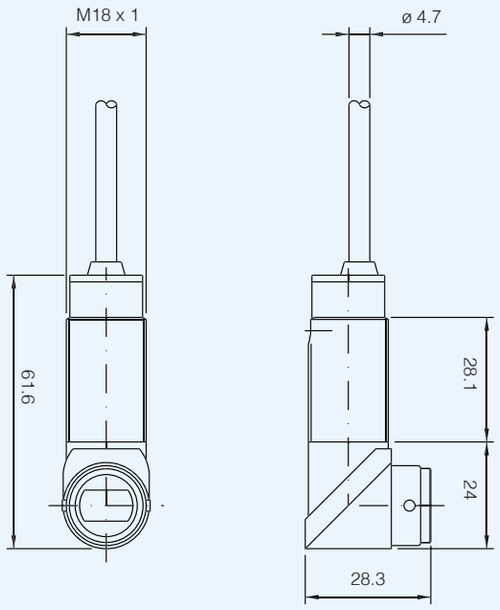

SP*/-*E**

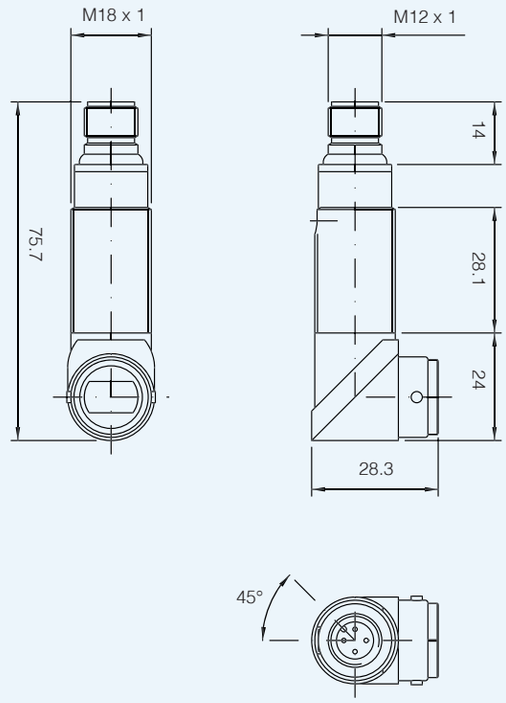

dimensions (mm)

SS*/-*A**

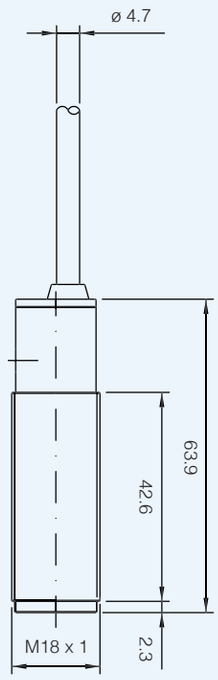

SS*/-*E**

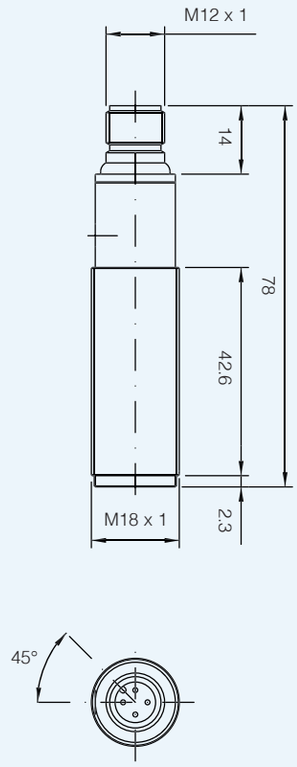

dimensions (mm)

accessories included in all plastic models

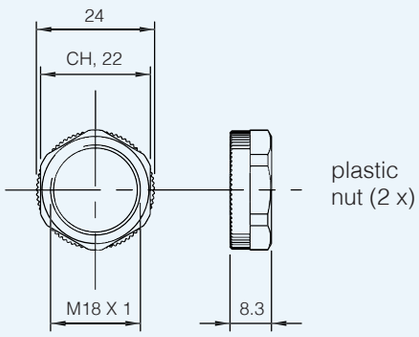

dimensions (mm)

accessories included in all metallic models

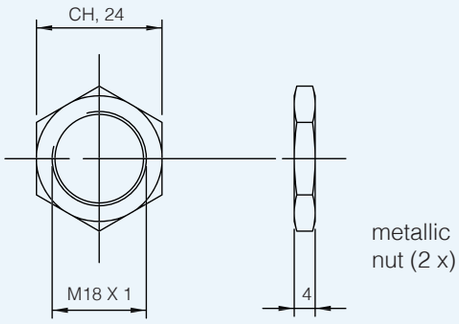

notes

MS - MP series

M18 DECOUT® DC output

features

- **Wide range of models: diffuse, retro-reflective, polarized, through-beam detection and background suppression**
- **Through-beam models with high sensing range**
- **Retro-reflective models with red visible polarized light**
- **Models with right angle optic (MP)**
- **Background suppression models with fixed distance**
- **Check function available for all through-beam models**
- **Complete protection against electrical damage**

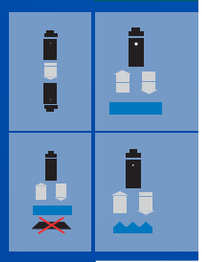

M18 DECOUT®
DC output

web contents

- **Application notes**
- **Photos**
- **Catalogue / Manuals**

code description

MS 0 / 0 0 - 0 A

series	MS	M18 DECOUT® photoelectric sensor
	MP	M18 photoelectric sensor with right angle optic and DECOUT® output
type	0	50 mm background suppression
	1	00 mm background suppression
	T	Focalized background suppr. 12 mm (focalizer STF-12), 25 mm (focalizer STF-25) (1)
	2	100 mm diffuse reflection
	3	100 mm diffuse reflection with regulation
	4	200 mm diffuse reflection
	6	400 mm diffuse reflection
	7	400 mm diffuse reflection with regulation
	C	4.5 m retro-reflective
	P	3.5 m polarized retro-reflective
	N	3.5 m polarized retro-reflective with regulation
	E	Standard emitter
	R	16 m standard receiver
	D	32 m long distance receiver
emitter type	0	Standard emitter - DECOUT® output
	X	Emitter with check
emitter	0	Standard emitter - DECOUT® output
housing material	0	Plastic housing
	1	Metal housing
cable / plug output	A	Axial cable output
	C	Right angle cable exit (1)
	E	M12 plug cable exit
	K	M12 right angle plug cable exit (1)

(1) Not available for MP models

available models

photoelectric sensors with axial optic

function	distance	axial cable exit 4 wires PNP/NPN - NO/NC		axial plug exit 4 wires PNP/NPN - NO/NC		radial cable exit 4 wires PNP/NPN - NO/NC		radial plug exit 4 wires PNP/NPN - NO/NC	
		plastic housing	metal housing	plastic housing	metal housing	plastic housing	metal housing	plastic housing	metal housing
background suppression	50 mm	MS0/00-0A	MS0/00-1A	MS0/00-0E	MS0/00-1E	-	-	MS0/00-0K	-
	100 mm	MS1/00-0A	MS1/00-1A	MS1/00-0E	MS1/00-1E	-	-	-	-
	focalized			MST/00-0E	MST/00-1E	-	-	-	-
direct diffuse	100 mm	MS2/00-0A	MS2/00-1A	MS2/00-0E	MS2/00-1E	-	-	-	-
		MS3/00-0A	MS3/00-1A	MS3/00-0E	MS3/00-1E	-	-	-	-
	200 mm	MS4/00-0A	MS4/00-1A	MS4/00-0E	MS4/00-1E	-	-	MS4/00-0K	-
	400 mm	MS6/00-0A	MS6/00-0A	MS6/00-0E	MS6/00-0E	-	-	MS6/00-0K	-
		MS7/00-0A	MS7/00-0A	MS7/00-0E	MS7/00-0E	-	-	MS7/00-0K	-
retro-reflective	4 m	MSC/00-0A	MSC/00-0A	MSC/00-0E	MSC/00-0E	MSC/00-0C	MSC/00-1C	MSC/00-0K	-
polarized	3.5 m	MSP/00-0A	MSP/00-1A	MSP/00-0E	MSP/00-1E	-	-	-	-
		MSN/00-0A	MSN/00-1A	MSN/00-0E	MSN/00-1E	-	-	MSE/00-0K	MSE/00-1K
through beam	emitter	MSE/00-0A	MSE/00-1A	MSE/00-0E	MSE/00-1E	-	-	-	-
	emitter with check	MSE/X0-0A	MSE/X0-1A	MSE/X0-0E	MSE/X0-1E	-	-	-	-
	receiver 16 m	MSR/00-0A	MSR/00-1A	MSR/00-0E	MSR/00-0E	-	-	MSR/00-0K	MSR/00-1K
	receiver 32 m	MSD/00-0A	MSD/00-1A	MSD/00-0E	MSD/00-1E	-	-	-	-

available models

photoelectric sensors with radial optic

function	distance	axial cable exit 4 wires PNP/NPN - NO/NC		axial plug exit 4 wires PNP/NPN - NO/NC		radial cable exit 4 wires PNP/NPN - NO/NC		radial plug exit 4 wires PNP/NPN - NO/NC	
		plastic housing	metal housing	plastic housing	metal housing	plastic housing	metal housing	plastic housing	metal housing
background suppression	50 mm	MP0/00-0A	MP0/00-1A	MP0/00-0E	MP0/00-1E	-	-	-	-
	100 mm	MP1/00-0A	MP1/00-1A	MP1/00-0E	MP1/00-1E	-	-	-	-
direct diffuse	200 mm	MP2/00-0A	-	MP2/00-0E	-	-	-	-	-
		MP4/00-0A	-	MP4/00-0E	-	-	-	-	-
	400 mm	-	-	MP6/00-0E	-	-	-	-	-
retro-reflective	4.5 m	MPC/00-0A	MPC/00-0A	MPC/00-0E	MPC/00-0E	-	-	-	-
polarized	3.5 m	-	-	-	-	-	-	-	-
through beam	emitter	MPE/00-0A	MPE/00-1A	MPE/00-0E	MPE/00-1E	-	-	-	-
	emitter with check	MPE/X0-0A	MPE/X0-1A	MPE/X0-0E	MPE/X0-1E	-	-	-	-
	receiver 16 m	MPR/00-0A	MPR/00-1A	MPR/00-0E	MPR/00-0E	-	-	-	-

technical specification

background suppression models

	M*0/00-*	M*1/00-**	MST/00-**
nominal sensing distance	50 mm [1]	100 mm [1]	12/25 mm
emission	infrared (880 nm)		red (660 mm)
regulation	-		
tolerance	0...+10 % Sn		
dfferential travel	≤ 5 %		≤ 10 %
repeatability	5 %		
operating voltage	10...30 Vdc		
ripple	≤ 10 %		
supply current	≤ 40 mA		≤ 30 mA
load current	≤ 100 mA		
leakage current	6 A (Ton = 10 ms)		
output voltage drop	1.2 V max. IL = 100 mA		
output type	DECOUT® (NPN/PNP, NO, NC)		
switching frequency	1 KHz		
power on delay	200 ms		
power supply protections	transient		
output protection	short circuit (with hold)		
operating temperature range	- 25°C...+ 70°C (without freeze)		
temperature drift	5 % Sr		10 % Sr
protection degree	IP67 (EN60529) [2]		
EMC	in conformity with the EMC Directive according to EN 60947-5-2		
external light interference	3,000 lux (incandescent lamp), 10,000 lux (sunlight)		
LEDs	red (output energized)		yellow
housing material	PBT (plastic) / nicked plated brass (metallic) / PC (cable exit)		
optic material	PMMA		plastic
tightening torque	1 Nm (plastic housing), 25 Nm (metallic housing)		
weight (approx)	plastic version: 30 g plug / 70 g cable metallic version: 100 g plug / 130 g cable		

[1] With 100x100 mm white matt paper [2] Protection guaranteed only with plug cable well mounted

technical specification

direct diffuse models

	M*2/00-**	M*3/00-**	M*4/00-**	M*6/00-0**	M*7/00-**
					
nominal sensing distance	100 mm [1]		200 mm [1]	400 mm [2]	
emission	infrared (880 nm)				
regulation	-	●	-		●
tolerance	-				+15...-10 % Sn
dfferential travel	≤ 5 %				≤ 10 %
repeatability	5%				
operating voltage	10...30 Vdc				
ripple	≤ 10 %				
supply current	≤ 40 mA				≤ 30 mA
load current	≤ 100 mA				
leakage current	6 A (Ton = 10 ms)				
output voltage drop	1,2 V max. IL = 100 mA				
output type	DECOUT® (NPN/PNP, NO NC)				
switching frequency	80 Hz				
power on delay	200 ms				
power supply protections	transient				
output protection	short circuit (with hold)				
operating temperature range	-25°C...+70°C (without freeze)				
temperature drift	5 % Sr				
protection degree	IP67 (EN60529)[3]				
EMC	in conformity with the EMC Directive according to EN 60947-5-2				
external light interference	3,000 lux (incandescent lamp), 10,000 lux (sunlight)				
LEDs	red (output energized)				
housing material	PBT (plastic) / nicked plated brass (metallic) / PC (cable exit)				
optic material	PMMA				
tightening torque	1 Nm (plastic housing), 25 Nm (metallic housing)				
weight (approx)	plastic version: 30 g plug / 70 g cable metallic version: 100 g plug / 130 g cable				

[1] With 100x100 mm white matt paper [2] With 200x200 mm white matt paper [4] Protection guaranteed only with plug cable well mounted

technical specification

retro-reflective and long distance models

	retro-reflective			through-beam	
	standard	polarized		standard	long distance
	M*C/00-*	M*P/00-**	MSN/00-**	M*E/**-** M*R/**-**	M*E/**-** M*D/**-**
					
nominal sensing distance	4,5 m [1]	3,5 m [1]		16 m	32 m
emission	infrared (880 nm)	red (660 mm)		infrared (880 nm)	
tolerance	+15...-10 % Sn			-	
dfferential travel	≤ 10 %				
repeatability	5 %				
operating voltage	10...30 Vdc				
ripple	≤ 10 %				
no-load supply current	≤ 30 mA			≤ 15 mA (emitter) ≤ 35 mA (emitter with check) ≤ 25 mA (receiver)	
load current	≤ 100 mA				
leakage current	≤ 10 µA				
output voltage drop	1,2 V max. IL = 100 mA				
output type	DECOUT® (NPN/PNP, NO/NC)				
switching frequency	80 Hz			30 Hz	
power on delay	200 ms				
power supply protections	transient				
output protection	short circuit (with hold)				
operating temperature range	- 25°C...+ 70°C (without freeze)				
temperature drift	≤ 10 % Sr				
protection degree	IP67 (EN60529) [2]				
EMC	in conformity with the EMC Directive according to EN 60947-5-2 60947-5-2				
external light interference	3,000 lux (incandescent lamp), 10,000 lux (sunlight)				
LEDs	red (output energized)				
housing material	PBT (plastic) / nickel-plated brass (metallic) / polycarbonate (cable exit)				
optic material	PMMA				
tightening torque	40 Nm (metallic housing)				
weight (approx)	plastic version: 30 g plug / 70 g cable metallic version: 100 g plug / 130 g cable				

[1] With 100x100 mm white matt paper [4] Protection guaranteed only with plug cable well mounted

plug

M12	M12 emitter with check	M12 emitter without check

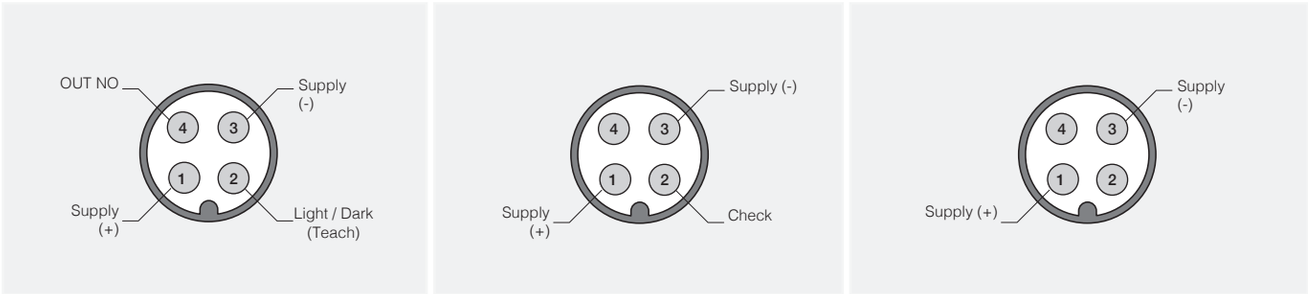

electrical diagrams of the connections

DECOUT® output

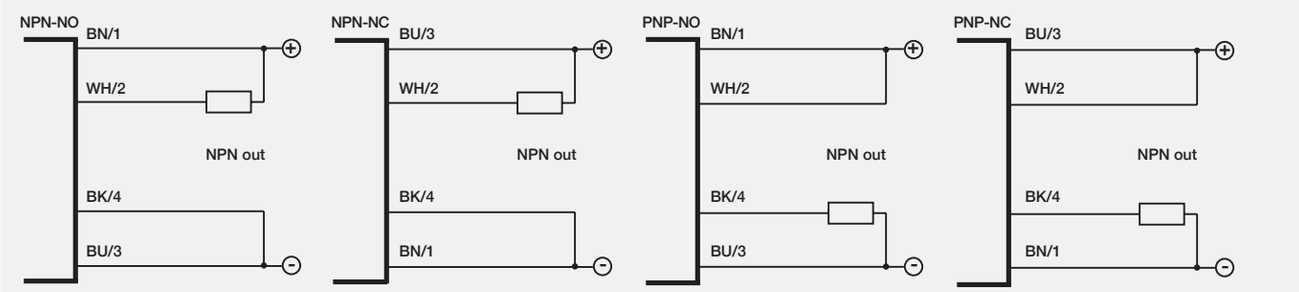

emitter with check

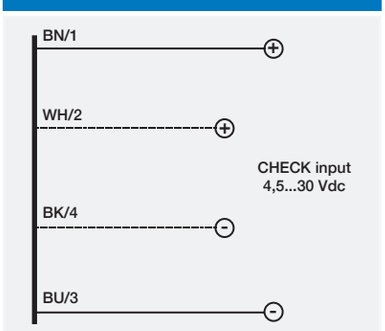

BN	brown
BU	blue
BK	black
WH	white
PK	pink
GY	gray

response diagrams

background suppression models

M*0/**-** excess gain	M*0/**-** spot dimension

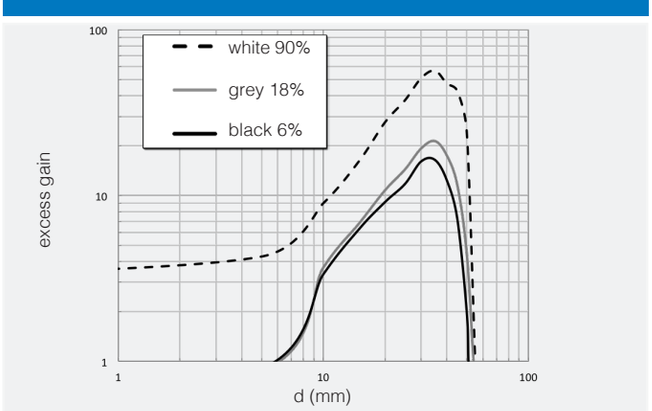

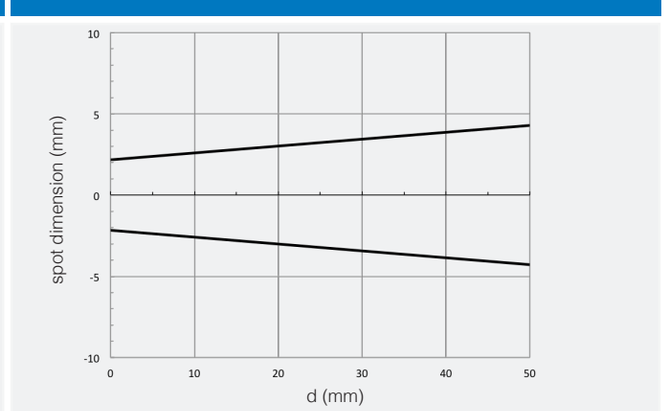

M*0/**-** parallel displacement

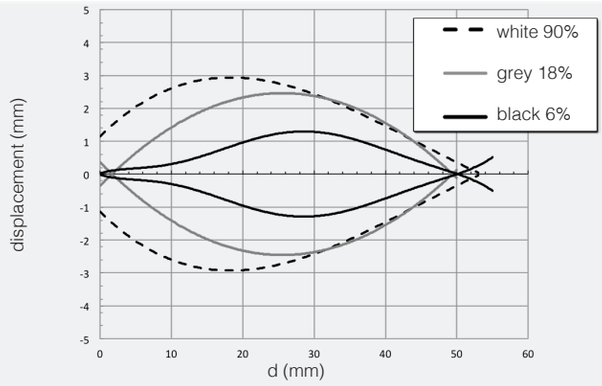

M*1/**-** excess gain

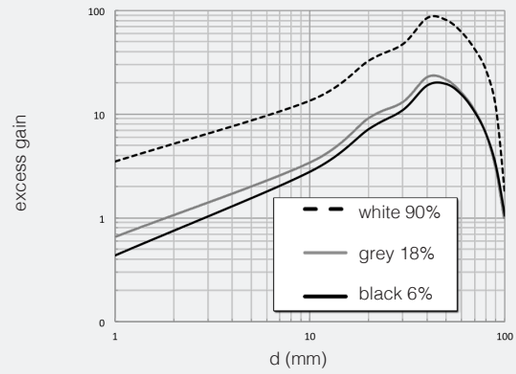

M*1/**-** spot dimension

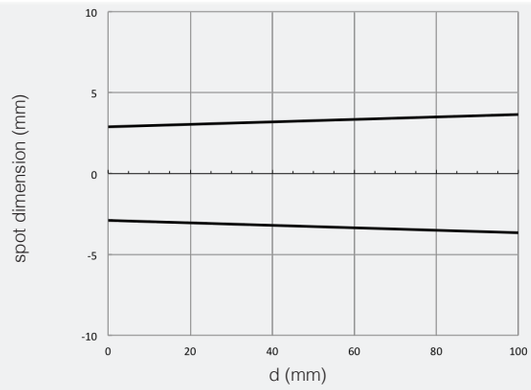

M*1/**-** parallel displacement

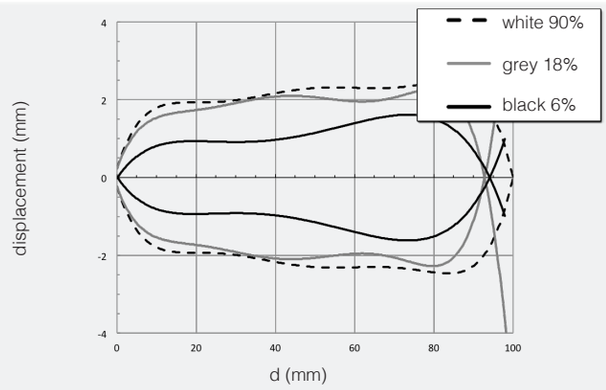

MST/00-** + STF12 excess gain

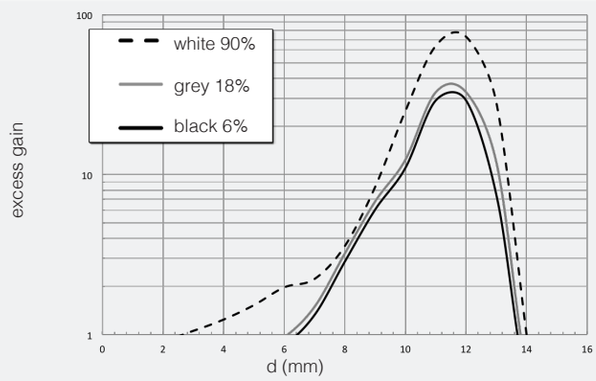

MST/00-** + STF12 spot dimension

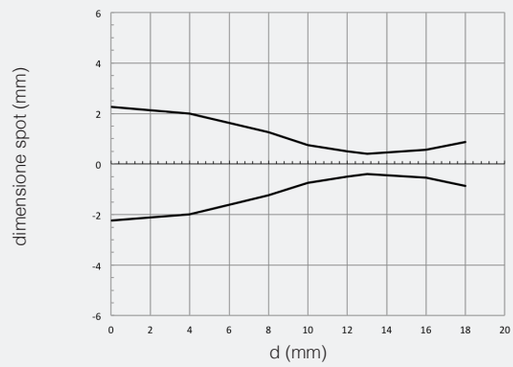

MST/00-** + STF12 parallel displacement

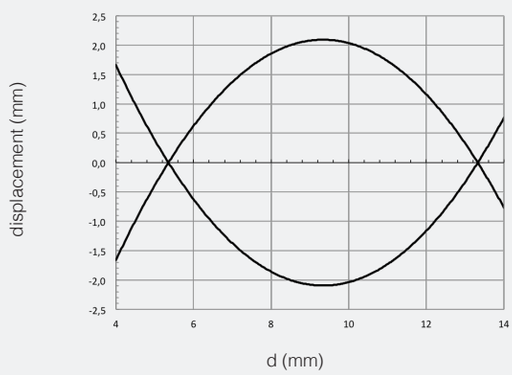

MST/00-** + STF25 excess gain

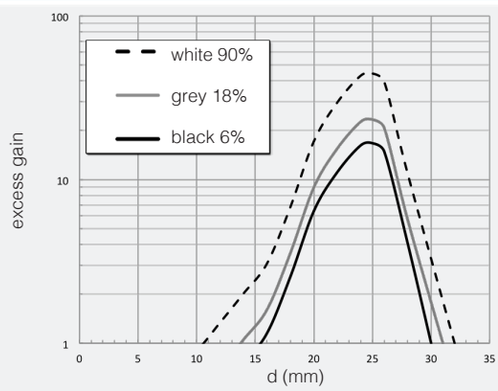

response diagrams

direct diffuse models

MST/00- + STF25 spot dimension**

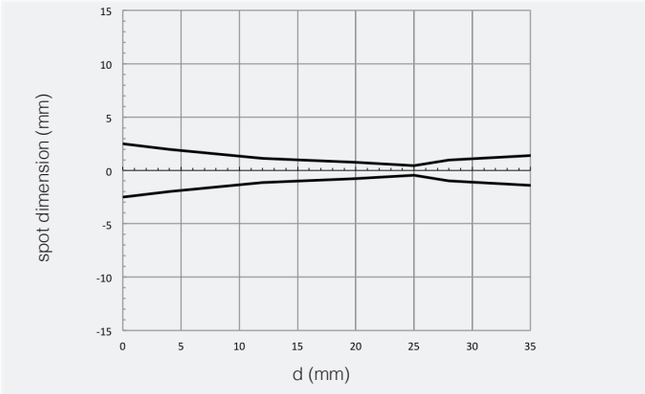

MST/00- + STF25 parallel displacement**

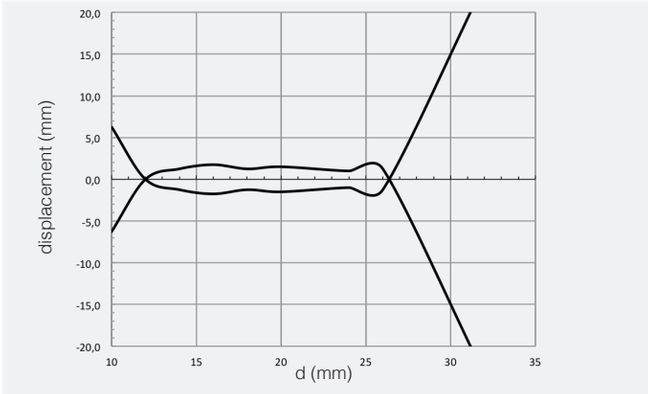

response diagrams

direct diffuse models

M*2, M*3/00- excess gain**

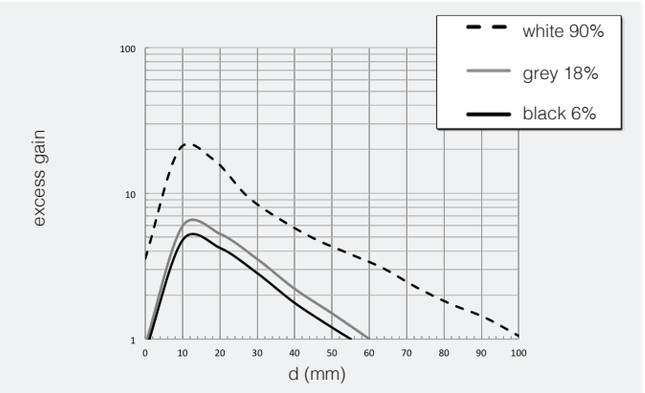

M*2, M*3/00- spot dimension**

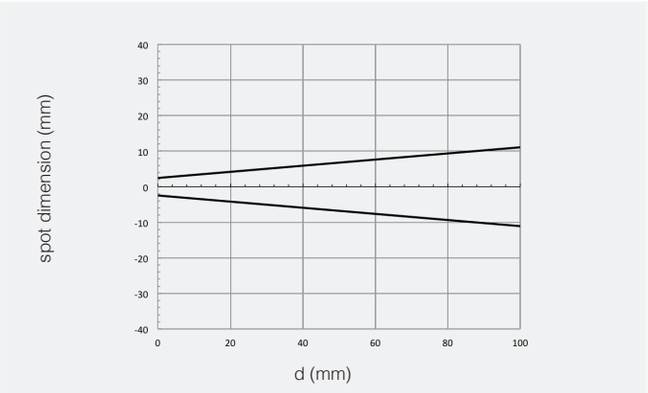

M*2, M*3/00- parallel displacement**

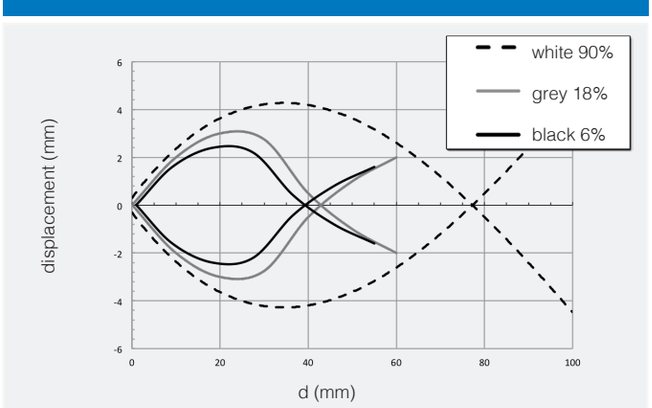

M*4/00- excess gain**

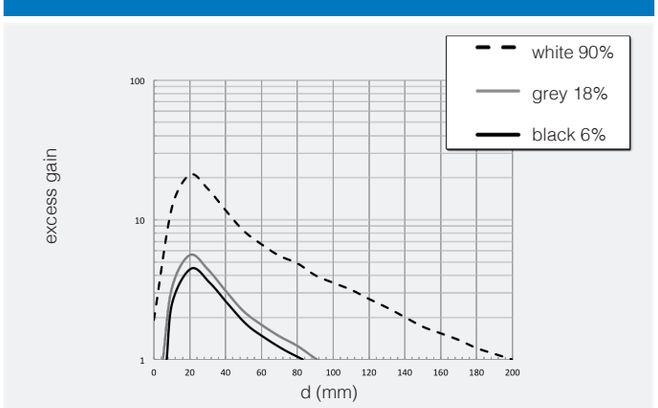

M*4/00-** dimensione spot

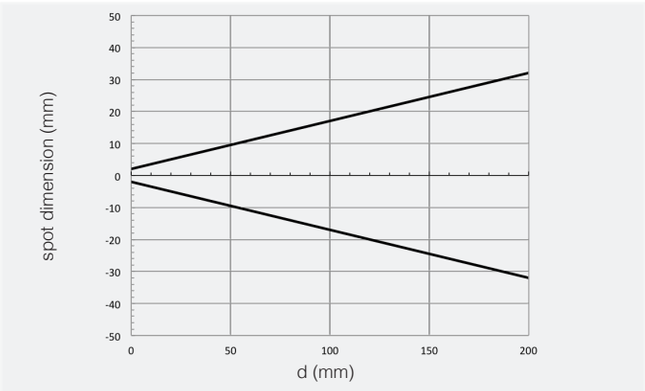

M*4/00-** parallel displacement

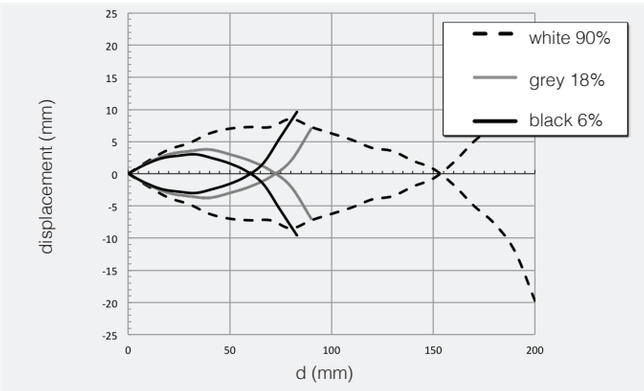

M*6, M*7**/00-** excess gain

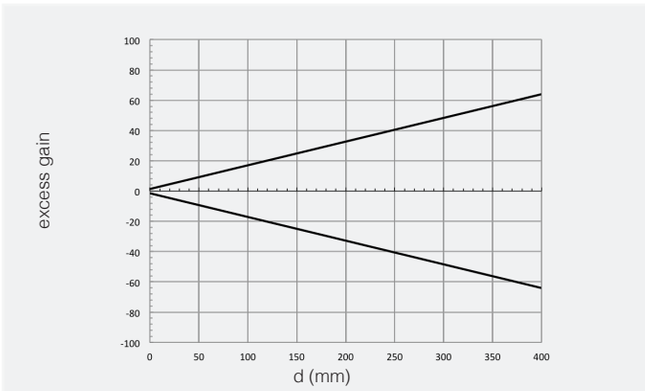

M*6, M*7**/00-** spot dimension

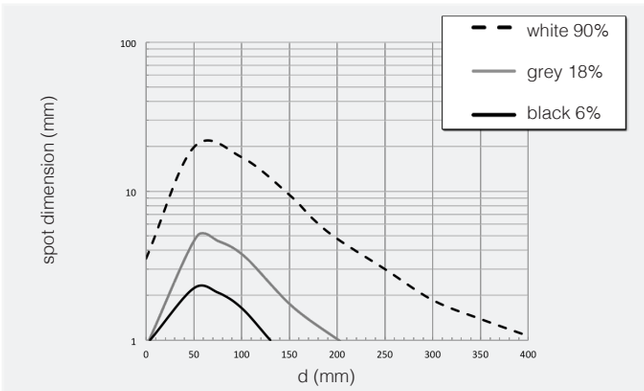

M*6, M*7**/00-** parallel displacement

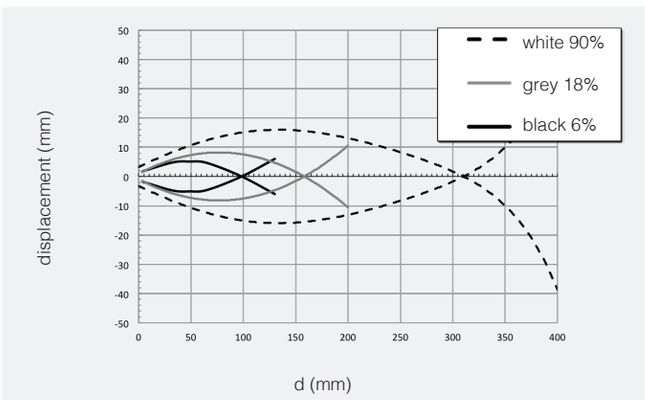

response diagrams

retro-reflective standard and polarized models

MSC/**-** excess gain

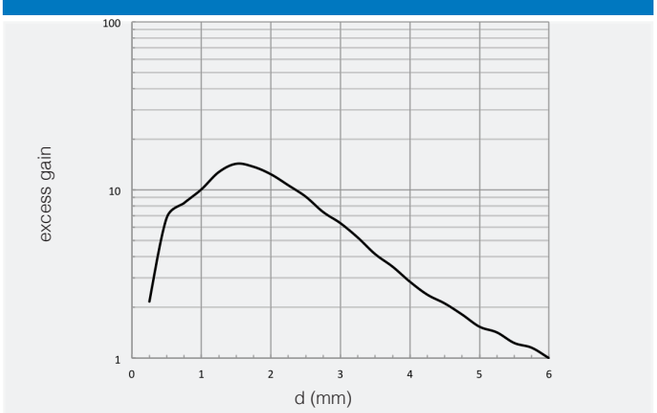

MSC/**-** spot dimension

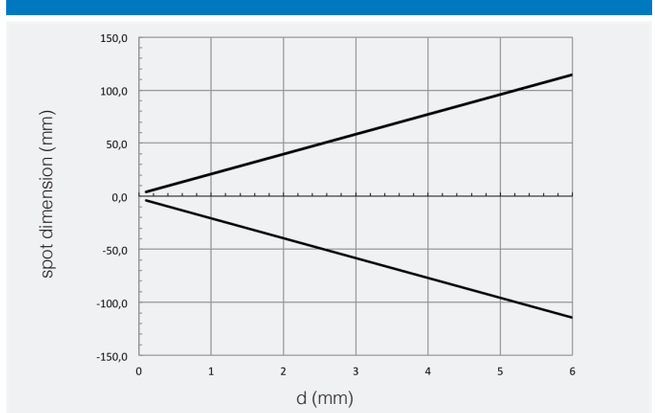

response diagrams

retro-reflective polarized models (diagrams measured using RL100)

MSC/-** parallel displacement**

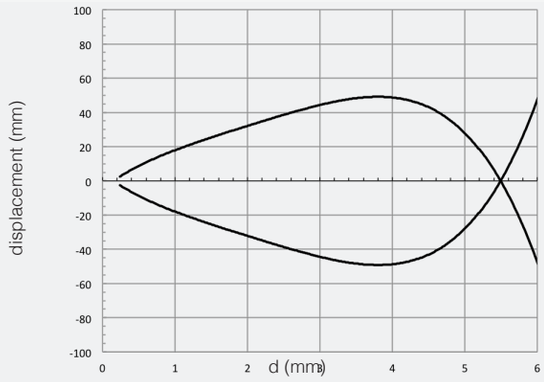

MSP, MSN/-** excess gain**

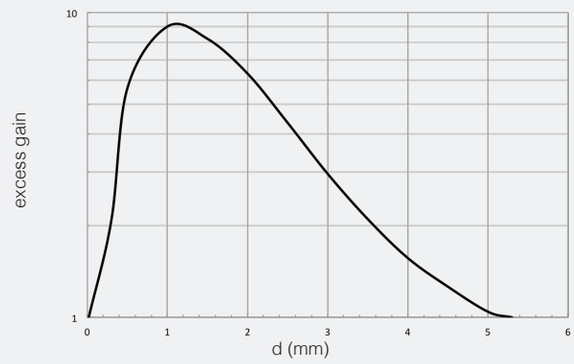

MSP, MSN/-** spot dimension**

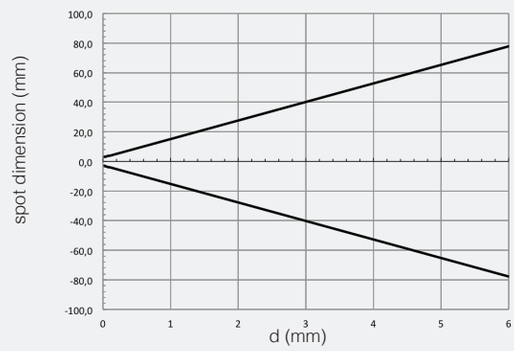

MSP, MSN/-** parallel displacement**

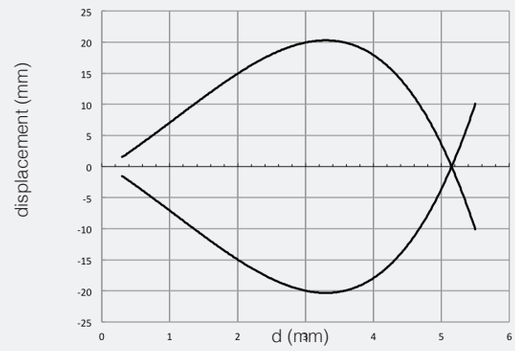

response diagrams

through-beam standard and long distance models

MSE/-** - MSD/**-** excess gain**

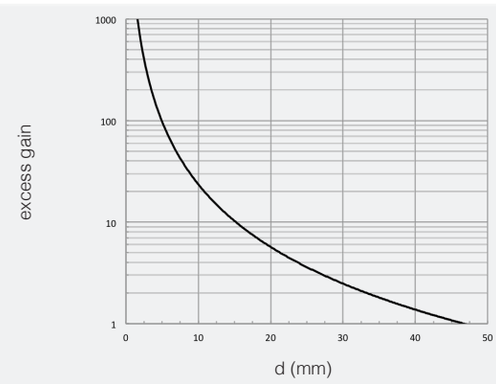

MSE/-** - MSD/**-** spot dimension**

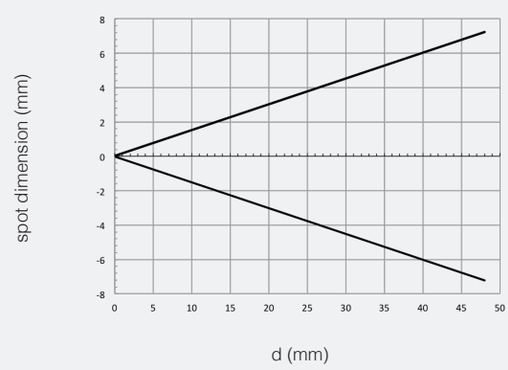

MSE/-** - MSD/**-** parallel displacement**

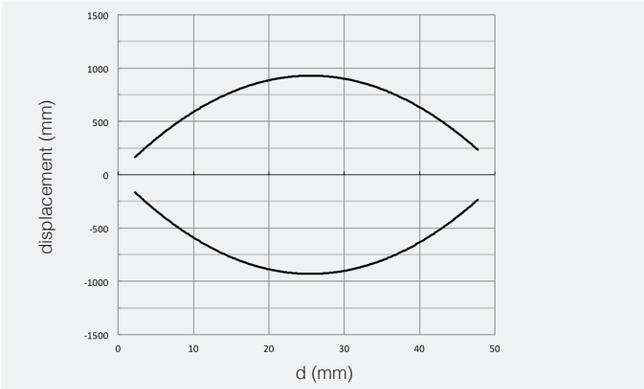

MSE/-** - MSR/**-** excess gain**

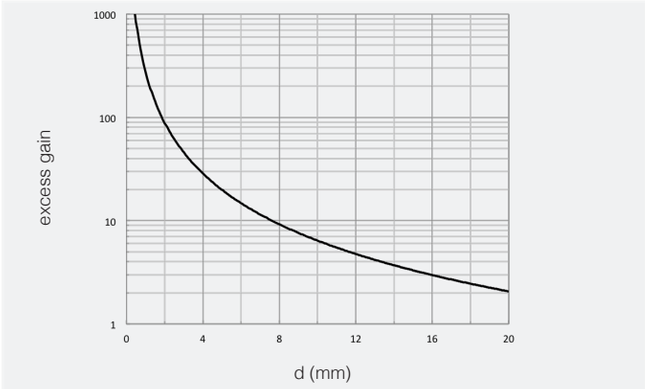

MSE/-** - MSR/**-** spot dimension**

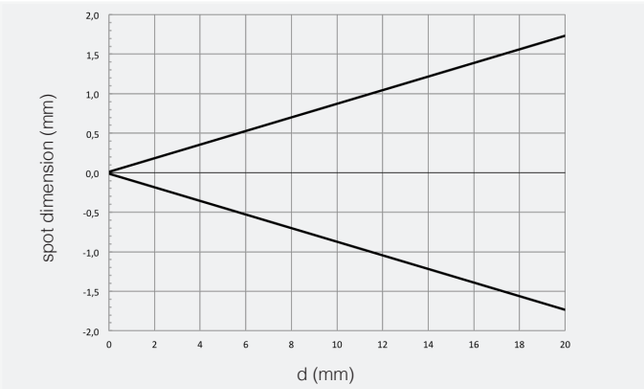

MSE/-** - MSR/**-** parallel displacement**

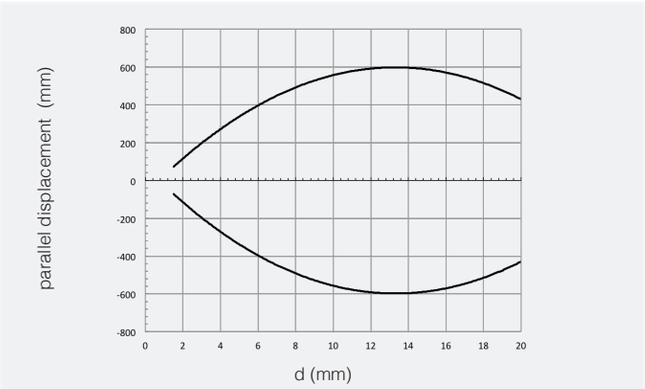

dimensions (mm)

axial models

MS*/00-*A

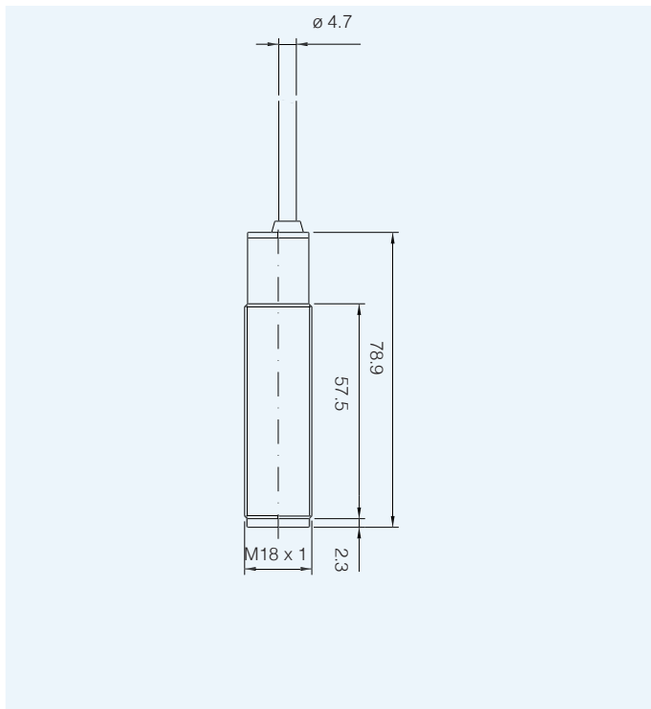

MS*/00-0C

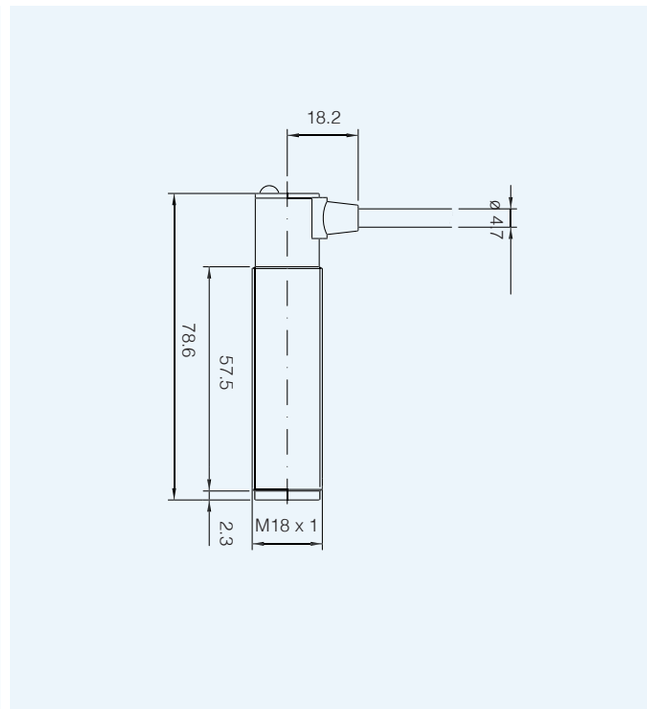

dimensions (mm)

axial models

MS*/00-*E

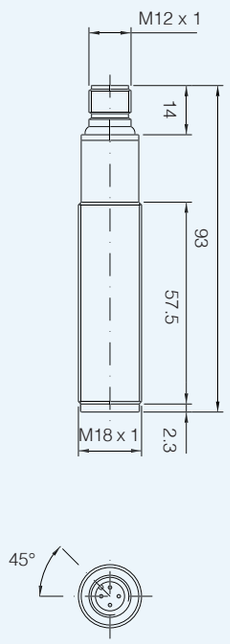

MS*/00-*K

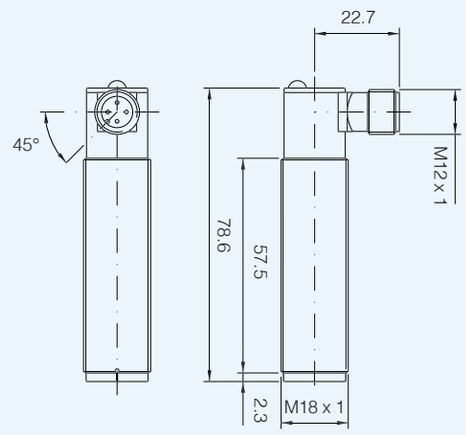

dimensions (mm)

background suppression radial models

MP0/00-*A; MP1/00-*A

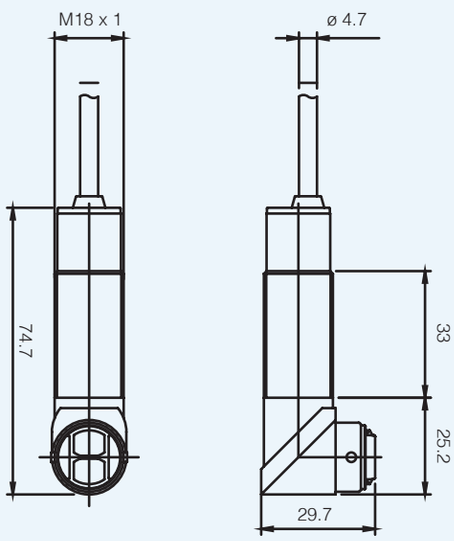

MP0/00-*E; MP1/00-*E

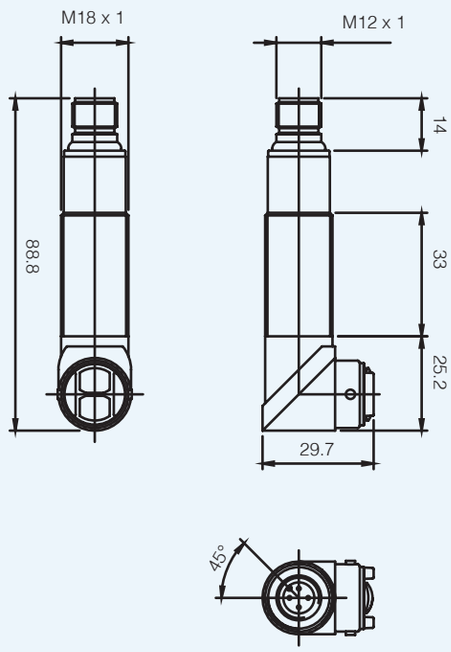

dimensions (mm)

diffuse reflection, retroreflective, polarized, through beam radial models

MP*/00-*A

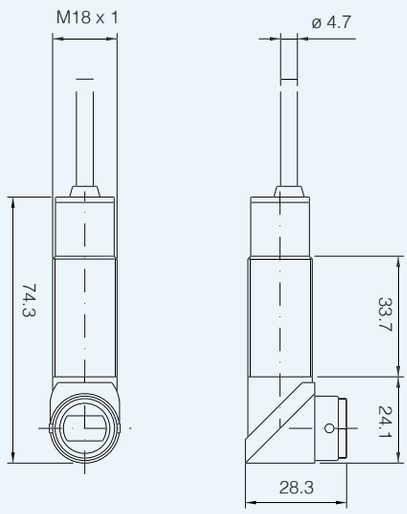

MP*/00-*E

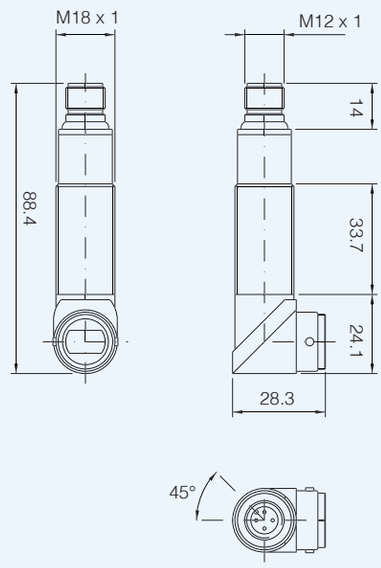

dimensions (mm)

accessories included in all plastic models

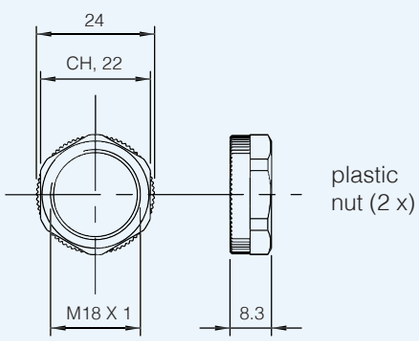

dimensions (mm)

accessories included in all metallic models

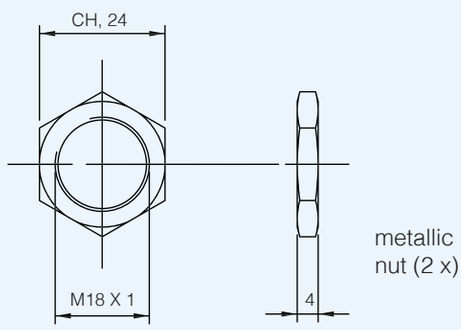

notes

SA series

M18 DC high performances
with rear adjustment

features

- **Wide range of models: diffuse, retro-reflective, polarized and fixed-focus**
- **All models are available with sensitivity adjustment trimmer**
- **Double LED indicator (ON/OFF - supply)**
- **NO/NC selectable output**
- **IP65 protection degree**
- **Complete protection against electrical damage**
- **Wide range of plugs, accessories and reflectors available**
- **Approvals: CE**

M18 with high performances

web contents

- **Application notes**
- **Photos**
- **Catalogue / Manuals**

code description

SA 2 / 0 N - 0 C

series	SA	M18 photoelectric sensor with high performance
	2	150 mm diffuse reflection
type	6	400 mm diffuse reflection
	8	1000 mm diffuse reflection
	C	6 m retro-reflective
	P	3.5 m polarized
	T	Diffuse reflection fixed-focus
NO / NC	0	NO/NC selectable
NPN / PNP output	N	NPN output logic
	P	PNP output logic
housing material	0	Plastic housing
	1	Metal housing
cable / plug exit	C	Right angle cable output 2 m
	K	M12 right angle plug cable exit

available models

output	function	distance	plastic models		metal models	
			PNP NO/NC	NPN NO/NC	PNP NO/NC	NPN NO/NC
right angle cable	diffuse reflection	150 mm	SA2/0P-0C	SA2/0N-0C	SA2/0P-1C	SA2/0N-1C
		400 mm	SA6/0P-0C	SA6/0N-0C	SA6/0P-1C	SA6/0N-1C
		1.000 mm	SA8/0P-0C	SA8/0N-0C	SA8/0P-1C	SA8/0N-1C
	retro-reflective	6 m	SAC/0P-0C	SAC/0N-0C	SAC/0P-1C	SAC/0N-1C
	polarized	3 m	SAP/0P-0C	SAP/0N-0C	SAP/0P-1C	SAP/0N-1C
	focalized with STF-12	12 mm	SAT/0P-0C	SAT/0N-0C	SAT/0P-1C	SAT/0N-1C
	focalized with STF-25	25 mm				
	focalized with STF-50	50 mm				
M12 right angle plug	diffuse reflection	150 mm	SA2/0P-0K	SA2/0N-0K	SA2/0P-1K	SA2/0N-1K
		400 mm	SA6/0P-0K	SA6/0N-0K	SA6/0P-1K	SA6/0N-1K
		1.000 mm	SA8/0P-0K	SA8/0N-0K	SA8/0P-1K	SA8/0N-1K
	retro-reflective	6 m	SAC/0P-0K	SAC/0N-0K	SAC/0P-1K	SAC/0N-1K
	polarized	3 m	SAP/0P-0K	SAP/0N-0K	SAP/0P-1K	SAP/0N-1K
	focalized with STF-12	12 mm	SAT/0P-0K	SAT/0N-0K	SAT/0P-1K	SAT/0N-1K
	focalized with STF-25	25 mm				
	focalized with STF-50	50 mm				

electrical diagrams of the connections

emitter NPN	receiver NPN

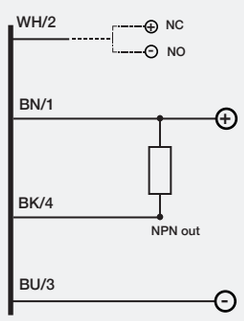

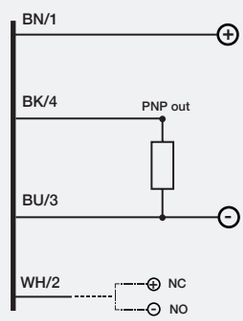

BN	brown
BU	blue
BK	black
WH	white
PK	pink
GY	gray

In case of combined load, resistive and capacitive, the maximum admissible capacity C is 0,2µF, for maximum load voltage and current.

Indications NO and NC are referred to the diffuse reflection sensors (on target absence). For retro-reflective models the indication NO to be replaced by NC and NC becomes NO.

technical specification

	iffuse reflection			retro-reflective		fixed-focus		
	standard			standard	polarized	STF-12	STF-25	STF-50
	SA2/0*-**	SA6/0*-**	SA8/0*-**	SAC/0*-**	SAP/0*-**	SAT/0*-**		
nominal sensing distance	150 mm (1)	400 mm (1)	1.000 mm (2)	6 m (3)	3 m (3)	12 mm	25 mm	50 mm
emission	infrared (880 nm)				red (660 nm)			
tolerance	+15...-10 % Sn							
hysteresis	≤ 10 %							
repeatability	5 %							
operating voltage	10...30 Vdc							
ripple	≤ 10 %							
no-load supply current	≤ 30 mA	≤ 35 mA	≤ 30 mA	≤ 35 mA	≤ 30 mA			
load current	≤ 100 mA							
leakage current	≤ 10 µA							
output voltage drop	2 V max. IL = 100 mA							
output type	NPN or PNP, NO/NC selectable							
switching frequency	1 kHz max.							
power on delay	200 ms							
power supply protections	polarity reversal, transient							
output protection	short circuit (autoreset)							
operating temperature range	- 25°C...+ 70°C (without freeze)							
temperature drift	≤ 10 % Sr							
protection degree	IP67 (EN60529) (4)							
EMC	in conformity with the EMC Directive according to EN 60947-5-2							
external light interference	3,000 lux (incandescent lamp), 10,000 lux (sunlight)							
LEDs	yellow (output energized), green (supply), red (activated output)							
housing material	BT (plastic housing),nickel-plated brass (metal housing), nylon (cable exit)							
optic material	PMMA					glass (STF-**)		
tightening torque	1 Nm (plastic housing) / Nm (metal housing)							
weight (approximate)	plastic version: 40 g connector / 75 g cable metallic version: 100 g connector / 140 g cable							

(1) With 100x100 mm white matt paper (2) With 200x200 mm white matt paper (3) With standard reflector Ø 80 mm (RL110 supplied seperately) (4) Protection guaranteed only with plug cable well mounted.

plug

M12

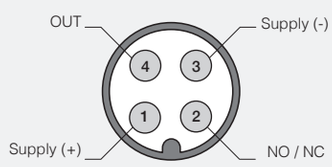

response diagrams

direct diffuse models

SA2/0*-** excess gain

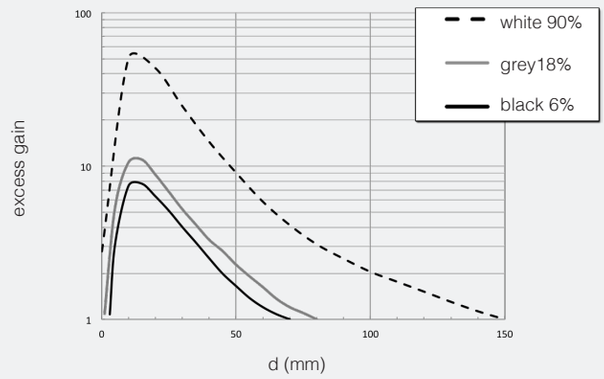

SA2/0*-** spot dimension

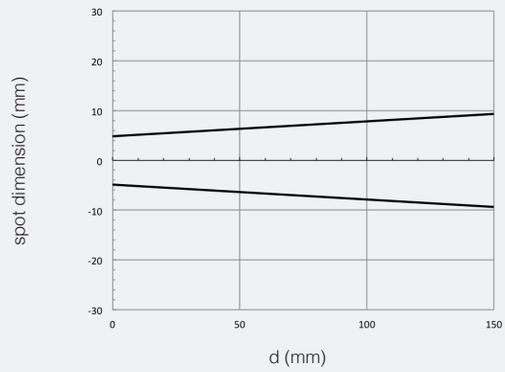

SA2/0*-** parallel displacement

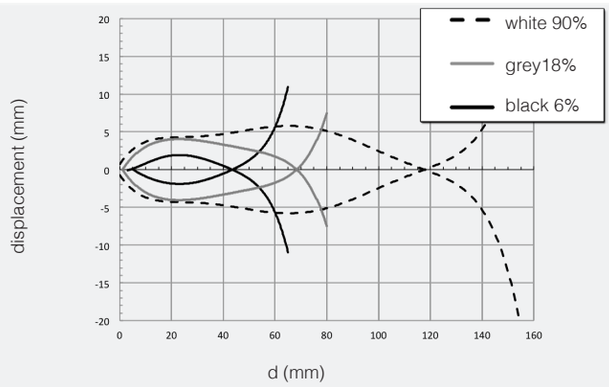

SA6/0*-** excess gain

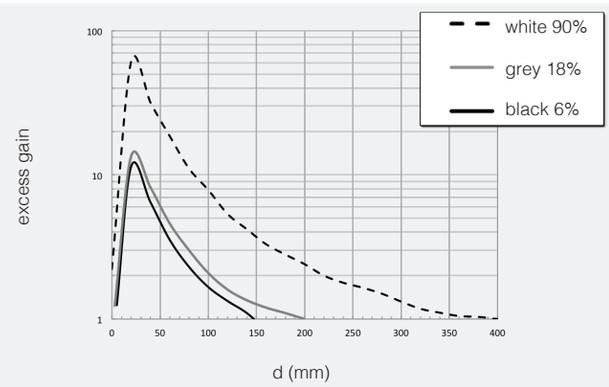

SA6/0*-** spot dimension

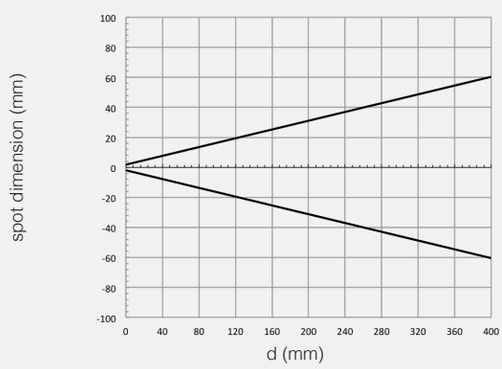

SA6/0*-** parallel displacement

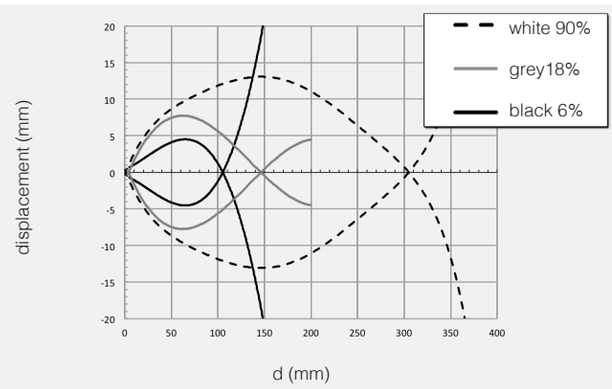

SA8/0*-** excess gain

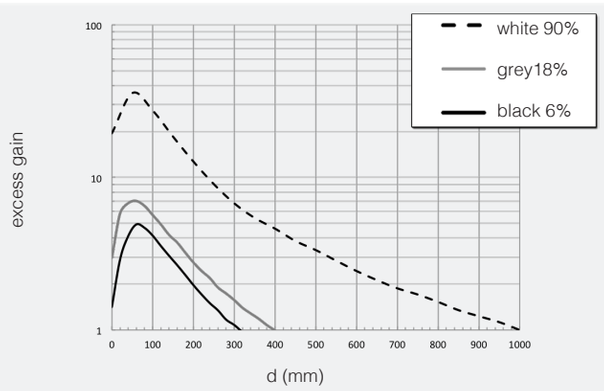

SA8/0*-** spot dimension

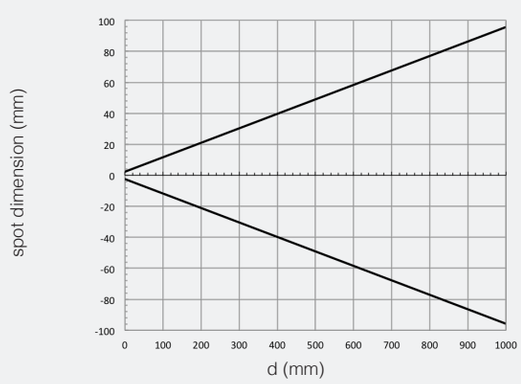

SA8/0*-** parallel displacement

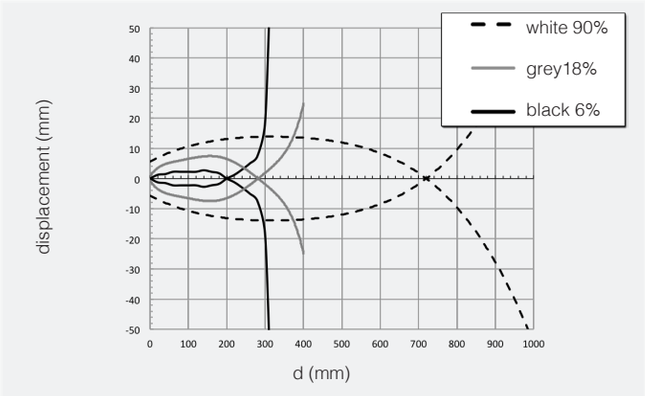

response diagrams

direct diffuse models

SAC/0*-** excess gain

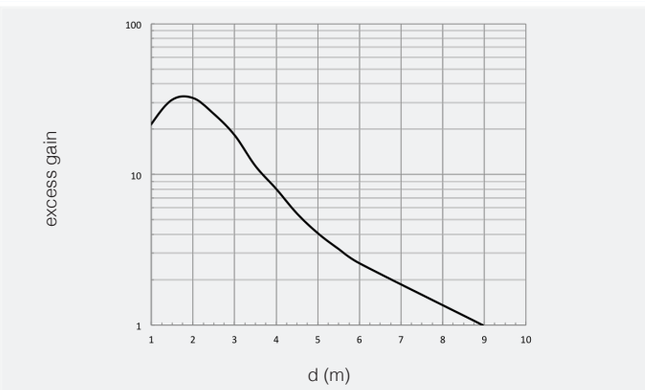

SAC/0*-** spot dimension

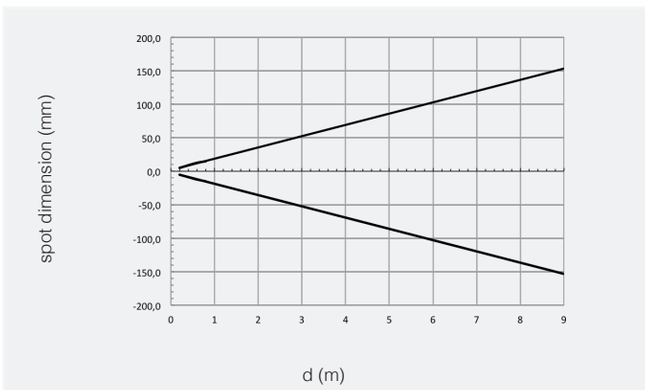

SAC/0*-** parallel displacement

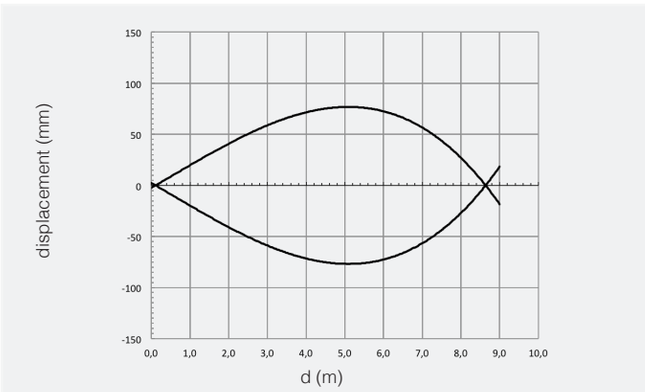

response diagrams

polarized models (diagrams detected with RL110)

SAP/-** excess gain**

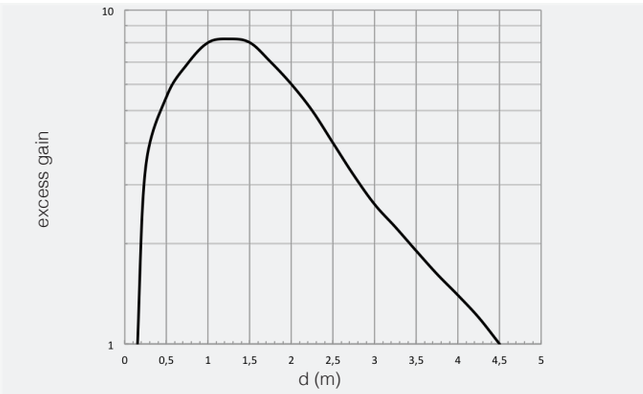

SAP/-** spot dimension**

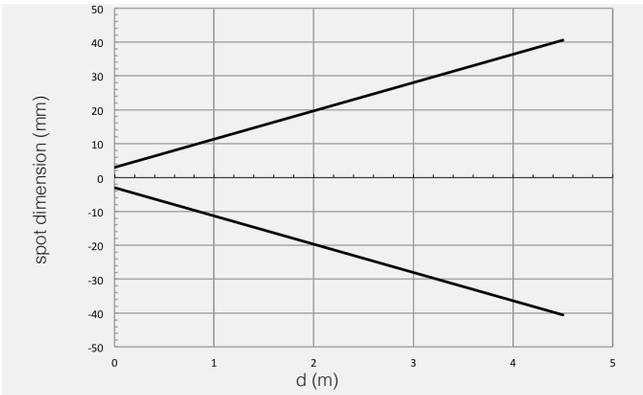

SAP/-** parallel displacement**

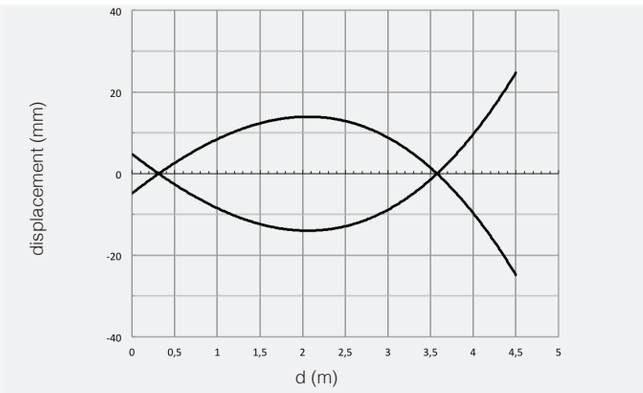

response diagrams

direct diffuse models

S*T/-** + STF-50 excess gain**

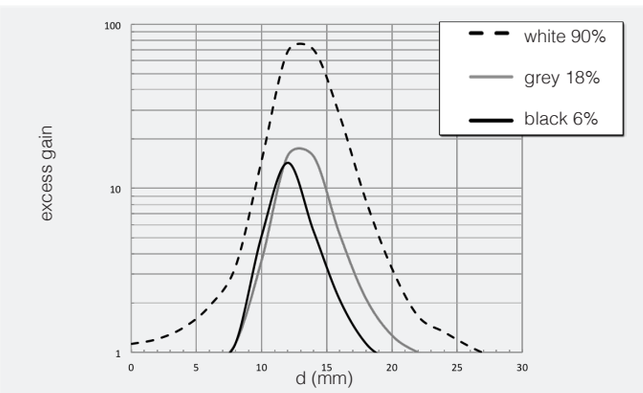

S*T/-** + STF-50 spot dimension**

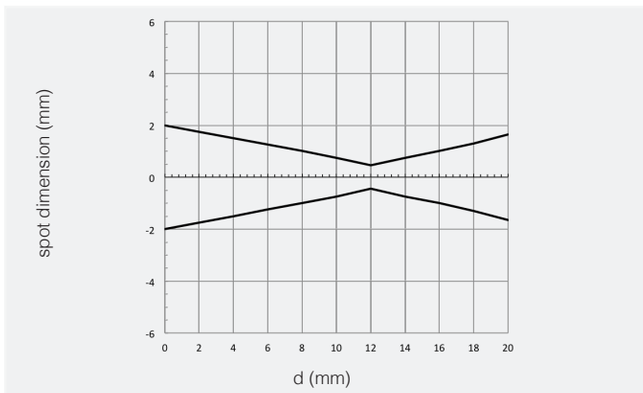

S*T/**-** + STF-50 parallel displacement

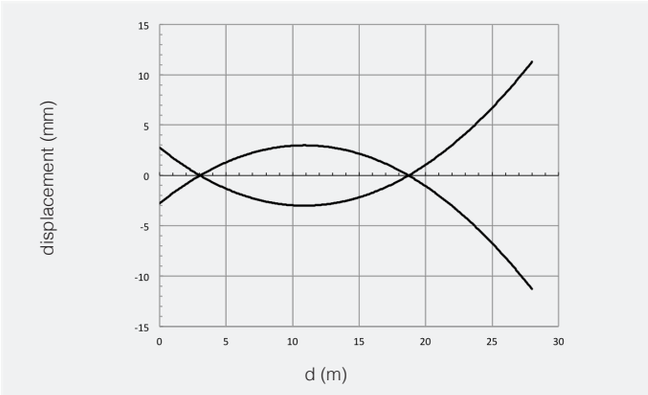

S*T/**-** + STF-50 excess gain

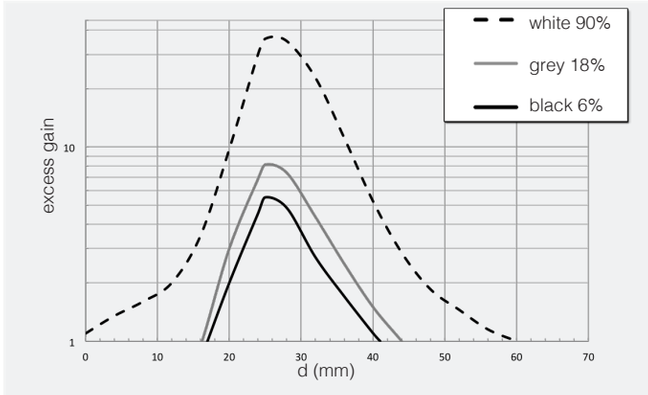

S*T/**-** + STF-50 spot dimension

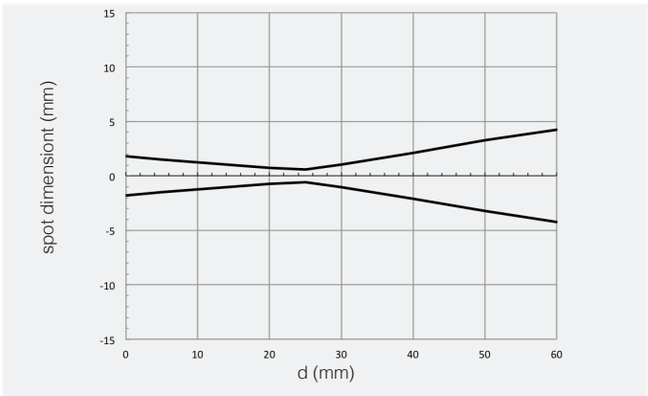

S*T/**-** + STF-50 parallel displacement

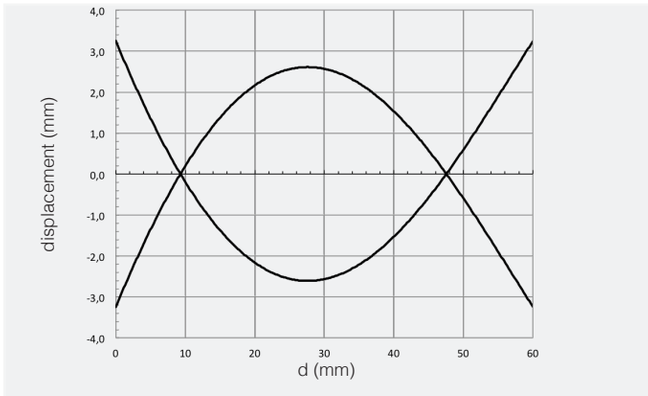

S*T/**-** + STF-50 excess gain

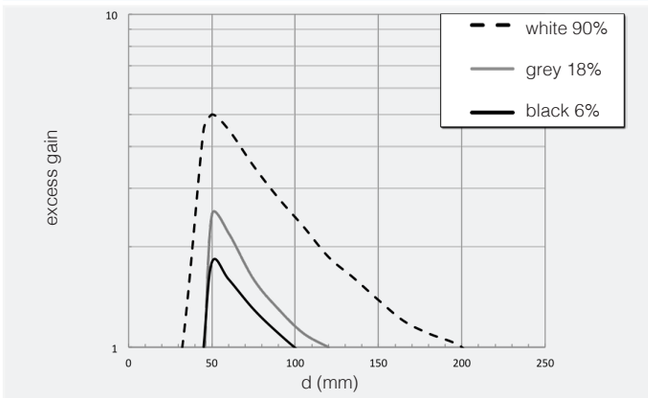

S*T/**-** + STF-50 spot dimension

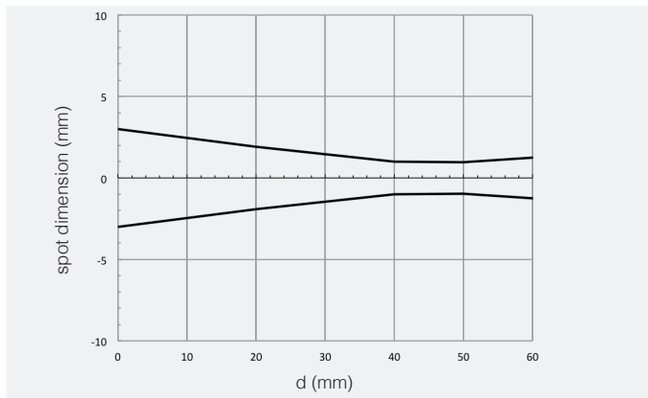

S*T/**-** + STF-50 parallel displacement

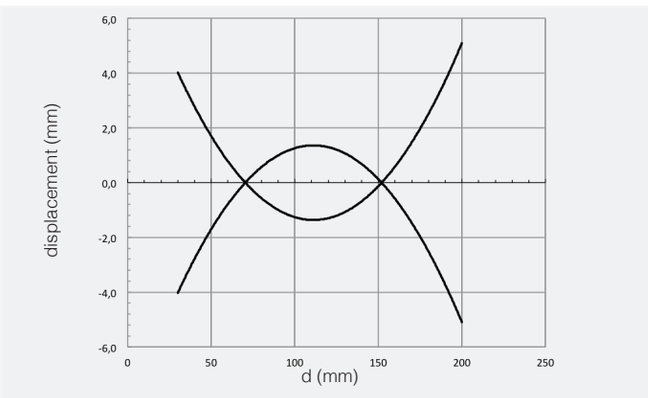

dimensions (mm)

SA*/0*-*C

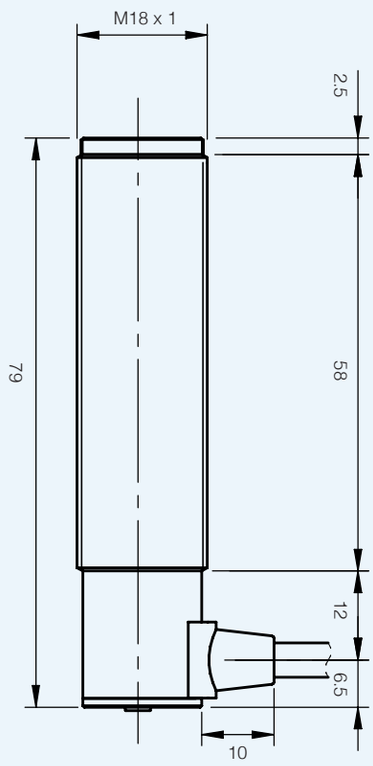

SA*/0*-*K

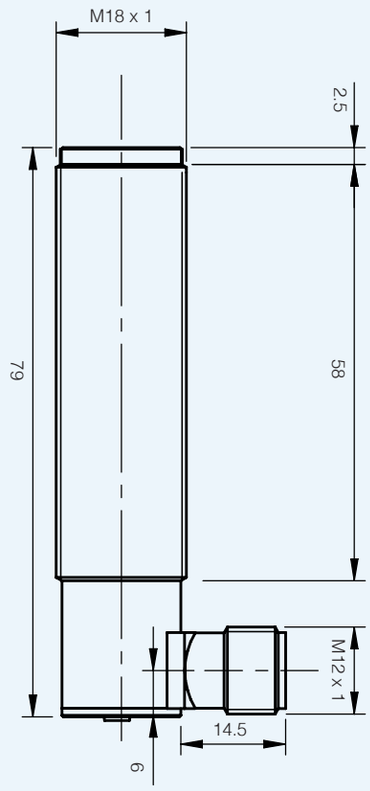

dimensions (mm)

accessories included in all plastic models

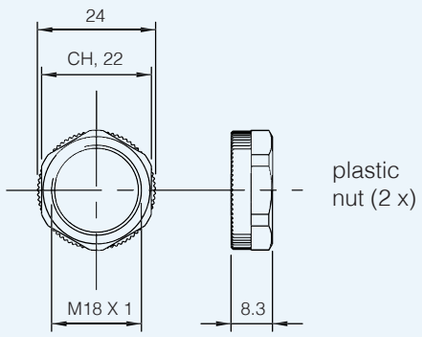

plastic
nut (2 x)

dimensions (mm)

accessories included in all metallic models

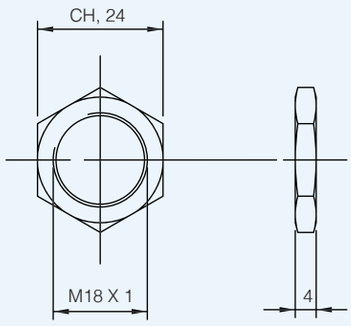

metallic
nut (2 x)

MV series

M18 AC multivoltage output
photoelectric sensors

features

- **Wide range of models: diffuse, retro-reflective, polarized, through-beam**
- **Through-beam models with high sensing range**
- **Retro-reflective models with polarized light (with visible beam)**
- **M12 plug cable exit in axial or right angle shape**
- **Low leakage current and high output current**
- **IP67 protection degree**
- **Complete protection against electrical damage**

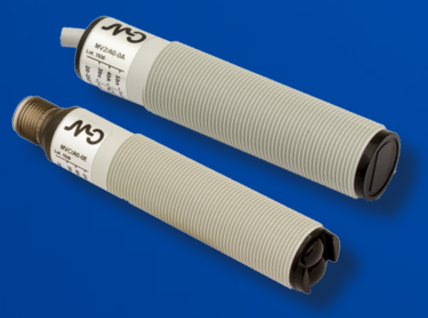

web contents

- **Application notes**
- **Photos**
- **Catalogue / Manuals**

code description

MV 2 / A 0 - 0 A

series	MV	M18 multivoltage photoelectric sensor
type	2	100 mm diffuse reflection
	4	200 mm diffuse reflection
	6	400 mm diffuse reflection
	C	4.5 m retro-reflective
	P	3.5 m polarized
	E	Emitter
	R	6 m standard receiver
	D	32 m high distance receiver
output	A	NO output state
	C	Uscita normalmente chiusa NC
	0	Emettitore
AC output	0	Uscita AC
NC output	0	NC output state
cable / plug output	A	Axial cable exit
	E	M12 plug cable exit

available models

M18 multitension photoelectric sensor

function	distance	housing	axial cable exit		M12 plug exit	
			3 wires N0	3 wires NC	3 wires N0	3 wires NC
diffuse reflection	100 mm	plastic	MV2/A0-0A	MV2/C0-0A	MV2/A0-0E	MV2/C0-0E
	200 mm		MV4/A0-0A	MV4/C0-0A	MV4/A0-0E	MV4/C0-0E
	400 mm		MV6/A0-0A	MV6/C0-0A	MV6/A0-0E	MV6/C0-0E
retro-reflective	4.5 m		MVC/A0-0A	MVC/C0-0A	MVC/A0-0E	MVC/C0-0E
polarized	3.5 m		MVP/A0-0A	MVP/C0-0A	MVP/A0-0E	MVP/C0-0E
through-beam	16 / 32 m		MVE/00-0A		MVE/00-0E	
	16 m		MVR/A0-0A	MVR/C0-0A	MVR/A0-0E	MVR/C0-0E
	32 m		MVD/A0-0A	MVD/C0-0A	MVD/A0-0E	MVD/C0-0E

technical specification

	diffuse reflection			retro-reflective	
	standard				polarized
	MV2/*0-0*	MV4/*0-0*	MV6/*0-0*	MVC/*0-0*	MVP/*0-0*
					
nominal sensing distance	100 mm (1)	200 mm (1)	400 mm (2)	4.5 m (3)	3.5 m (3)
emission	infrared (880 nm)				red (660 nm)
tollerance	+15...-5 % Sn				
hysteresis	≤ 10 %				
repeatability	5 %				
operating voltage	20...253 Vac / 50...60 Hz				
ripple	≤ 10 %				
no-load supply current	≤ 30 mA_{RMS}				
load current	5...300 mA_{RMS} (Ta = 50°C)				
inrush current	6 A (Ton = 10 ms)				
leakage current	1.5 mA_{RMS} max. (Voltaggio = 250 Vac)				
voltage drop	3 V max. IL = 300 mA				
output type	TRIAC				
switching frequency	25 Hz				
power on delay	200 ms				
temperature range	- 25°C...+ 70°C (without freeze)				- 25°C...+ 60°C
temperature drift	≤ 10 % Sr				
protection degree	IP67 (EN60529) (4)				
EMC	in conformity with the EMC Directive according to EN 60947-5-2				
external light interference	3,000 lux (incandescent lamp), 10,000 lux (sunlight)				
LEDs	red				
housing material	PBT (plastic housing) / polycarbonate (cable exit)				
lenses material	PMMA				
tightening torque	1 Nm				
weight (approximate)	30 g connector / 100 g cable				

(1) With 100x100 mm white matt paper (2) With 200x200 mm white matt paper (3) With standard reflector Ø80 mm (RL110 supplied seperately) (4) Protection guaranteed only with plug cable well mounted

technical specification

	through-beam	
	standard	high distance
	M*E/00-0* + M*R/*0-0*	M*E/00-0* + M*D/*0-0*
nominal sensing distance	16 m	32 m
emission	infrared (880 nm)	
minimum detectable object	Ø 7,5 mm	
tollerance	see Sr (glossary)	
hysteresis	≤ 10 %	
repeatability	5 %	
operating voltage	20...253 Vac / 50...60 Hz	
no-load supply current	≤ 30 mA_{RMS} (emitter), 15 mA_{RMS} (receiver)	
load current	5...300 mA_{RMS} (Ta = 50°C)	
inrush current	6 A (Ton = 10 ms)	
leakage current	1,5 mA_{RMS} max. (Voltaggio = 250 Vac)	
voltage drop	3 V max. IL = 300 mA	
output type	TRIAC	
switching frequency	25 Hz	
power on delay	200 ms	
temperature range	- 25°C...+ 70°C (without freeze)	
temperature drift	≤ 10 % Sr	
protection degree	IP67 (EN60529) [1]	
EMC	in conformity with the EMC Directive according to EN 60947-5-2	
external light interference	3,000 lux (incandescent lamp), 10,000 lux (sunlight)	
LEDs	red (output energized)	
housing material	PBT (plastic) / polycarbonate (cable exit)	
lenses material	PMMA	
tightening torque	1 Nm	
weight (approximate)	30 g plug / 100 g cable	

[1] Protection guaranteed only with plug cable well mounted

electrical diagrams of the connections

emitter	AC exit
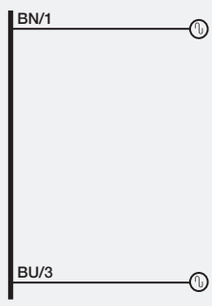	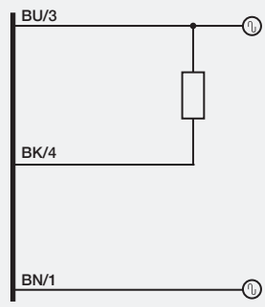

BN	brown
BU	blue
BK	black
WH	white
PK	pink
GY	gray

plug

MQ background suppression

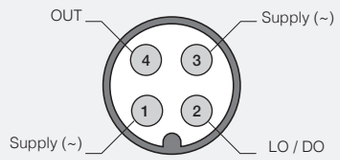

response diagrams

diffuse reflection models

MV2/00- excess gain**

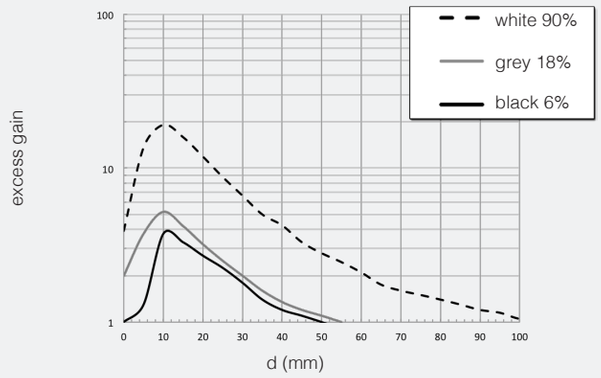

MV2/00- spot dimension**

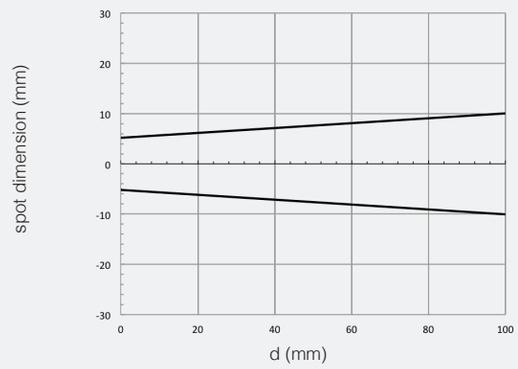

MV2/00- parallel displacement**

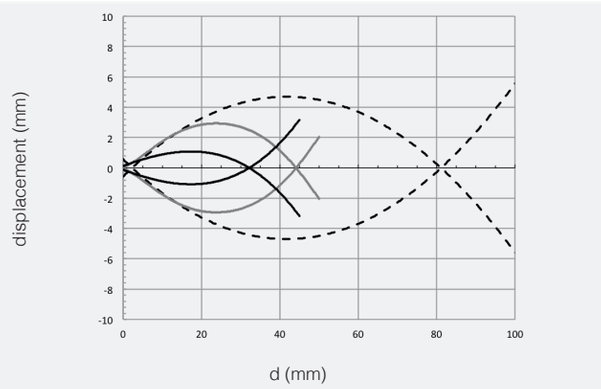

MV4/00- excess gain**

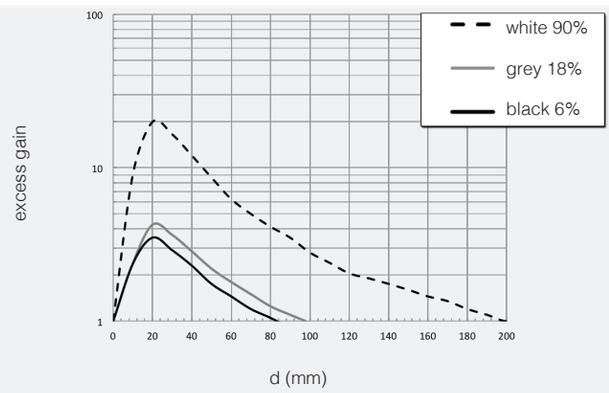

MV4/00- spot dimension**

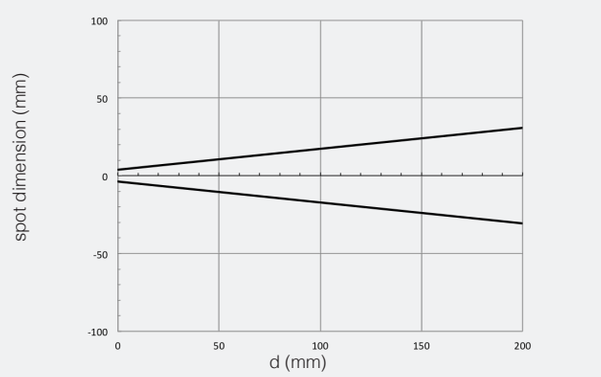

MV4/00- parallel displacement**

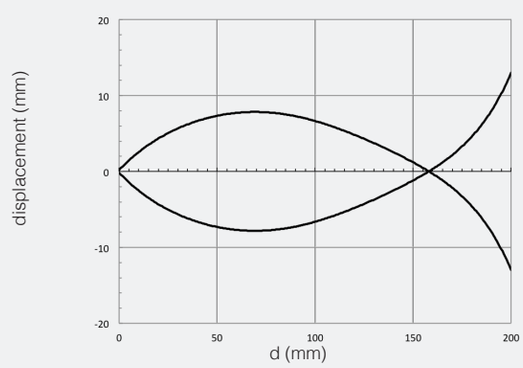

MV6/0*- excess gain**

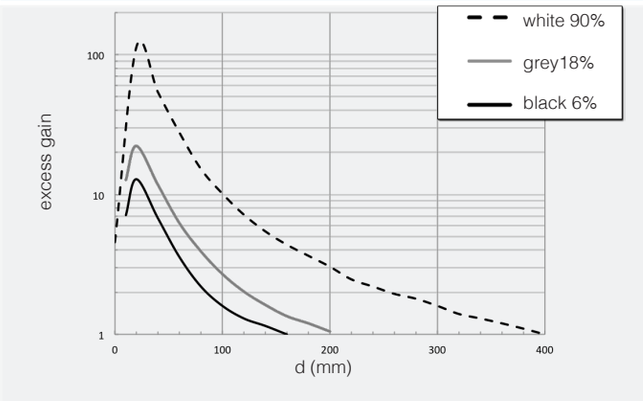

MV6/0*- spot dimension**

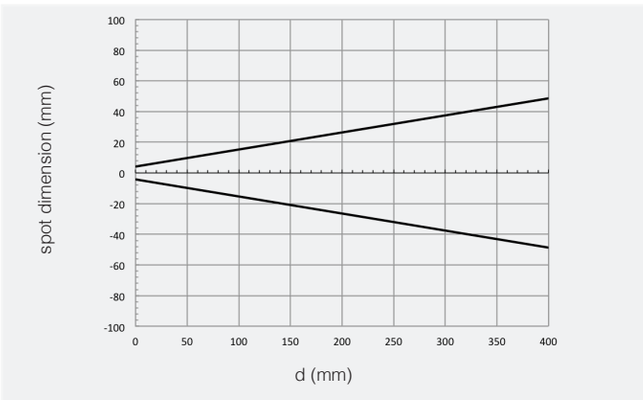

MV6/0*- parallel displacement**

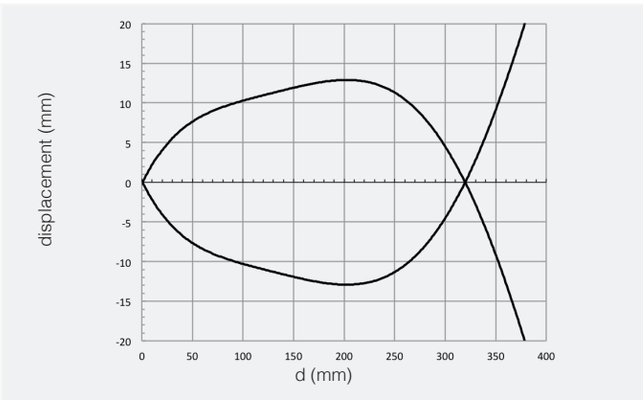

response diagrams

retro-reflective models (diagrams detected using RL110)

MVC/-** excess gain**

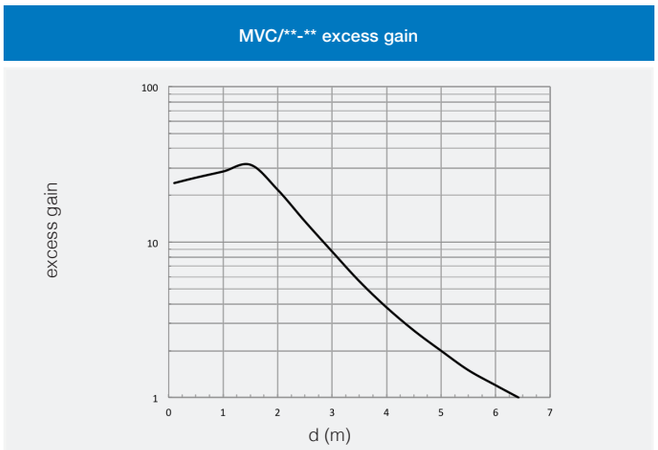

MVC/-** spot dimension**

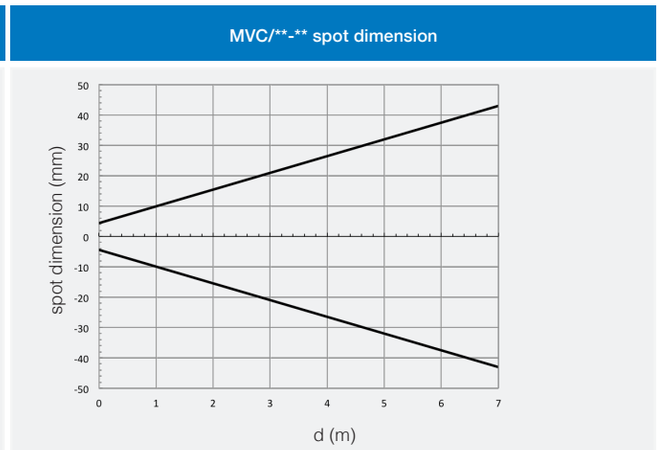

MVC/-** parallel displacement**

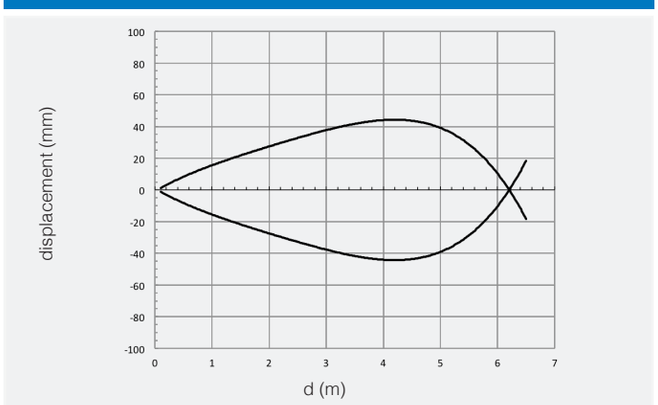

response diagrams

polarized models

MVP/-** excess gain**

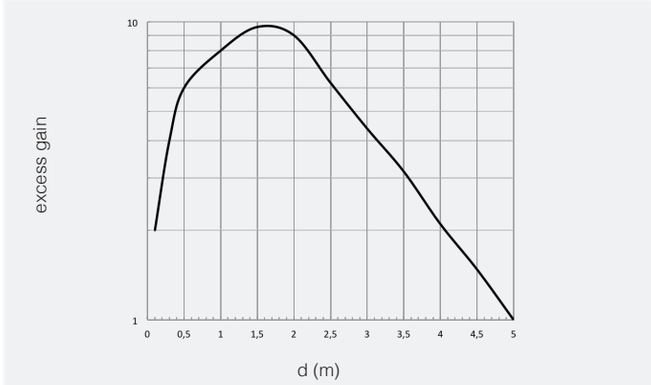

MVP/-** spot dimension**

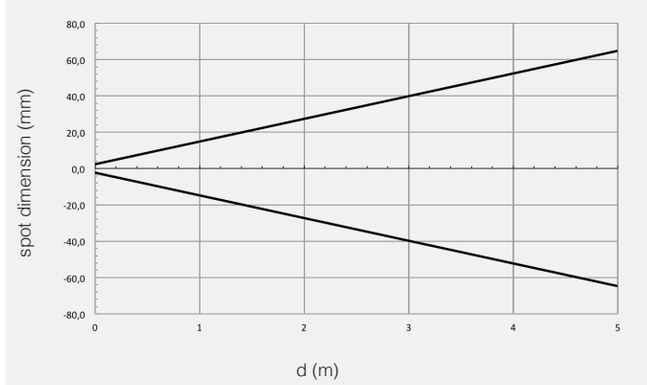

MVP/-** parallel displacement**

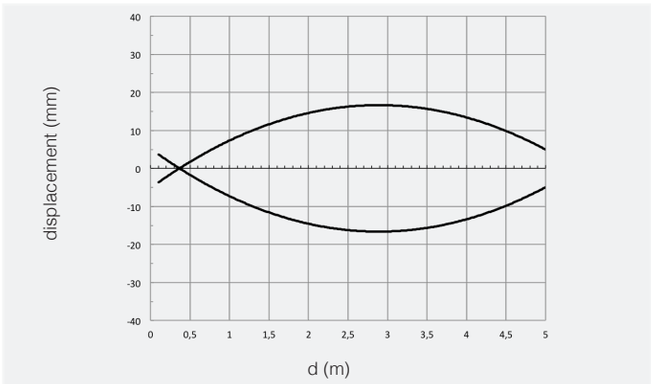

response diagrams

through-beam models

MVE/-** - MVR/**-** excess gain**

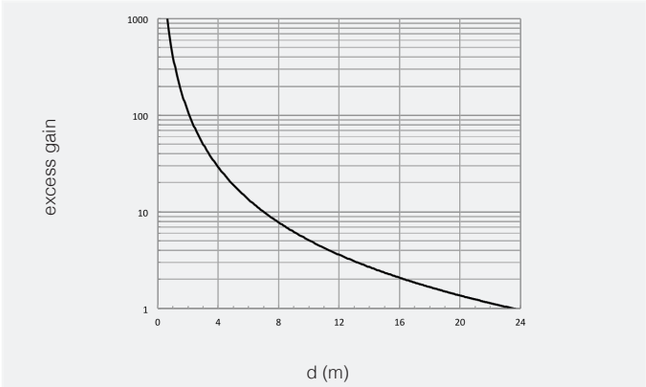

MVE/-** - MVR/**-** spot dimension**

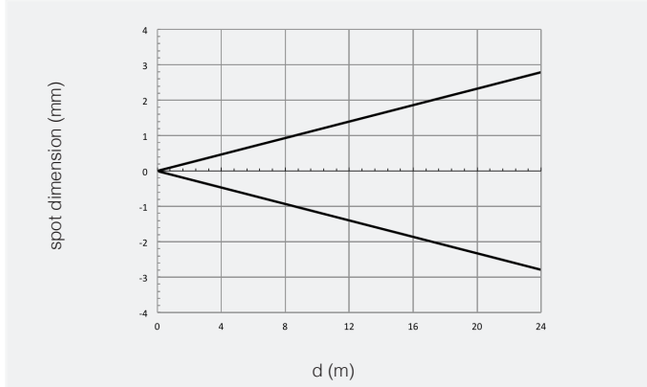

MVE/-** - MVR/**-** parallel displacement**

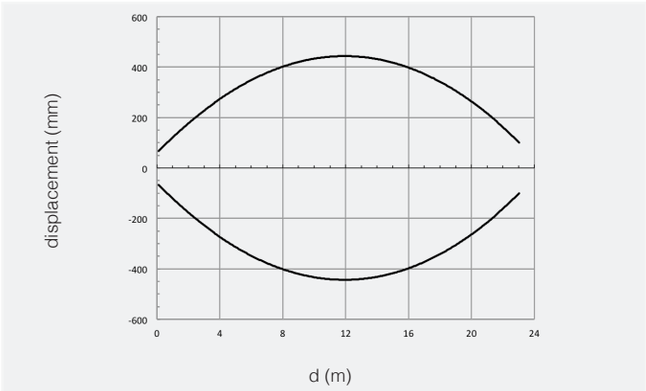

MVE/-** - MVD/**-** excess gain**

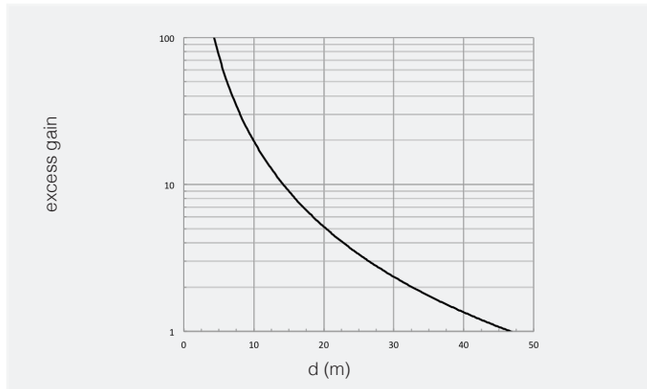

MVE/-** - MVD/**-** spot dimension**

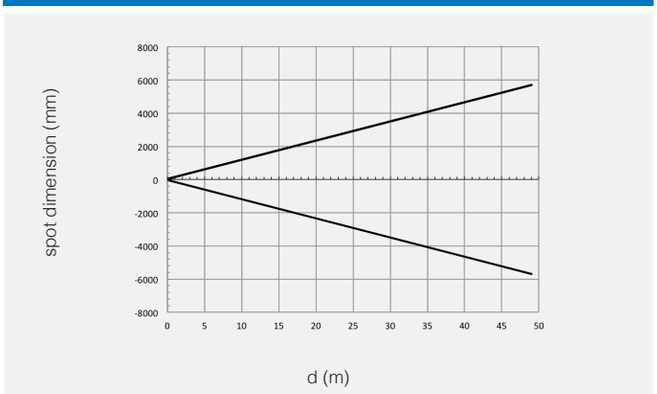

MVE/-** - MVD/**-** parallel displacement**

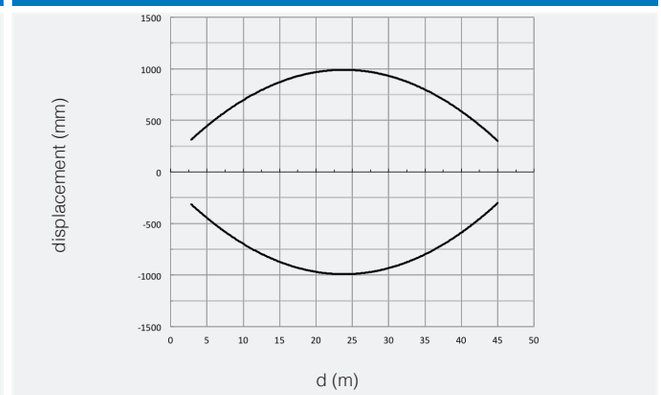

dimensions (mm)

axial models

MV*/*0-*A	MV*/*0-*E
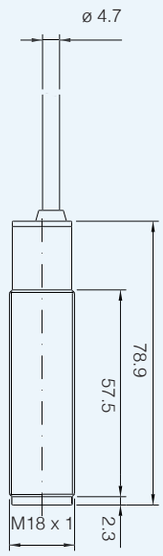	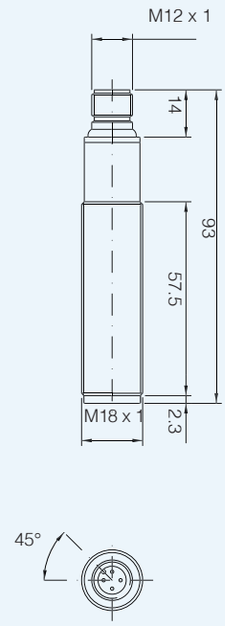

dimensions (mm)

accessories included in all plastic models

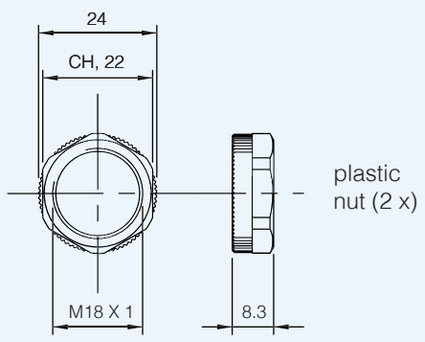

dimensions (mm)

accessories included in all metallic models

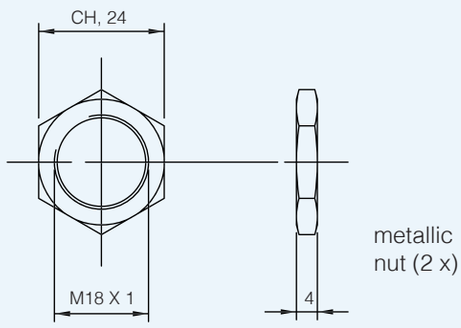

MQ0 / MQ1 series

M18 with fixed distances background suppression and 90° optics

features

- **Models with 50 mm or 100 mm max reading distance**
- **M12 plug connection**
- **Plastic housing**
- **Supply voltage 20...253 Vac**
- **LED output status indicator**
- **IP67 protection degree**

web contents

- **Application notes**
- **Photos**
- **Catalogue / Manuals**

M18 AC with 90° optic

code description

MQ 0 / 0 0 - 0 E

series	MQ	M18 photoelectric sensor AC with 90° optic
type	0	50 mm background suppression without sens. Ad just.
	1	100 mm background suppression without sens. Ad just.
4 wires	0	4 wires Light ON- Dark ON selectable
AC output	0	AC output
housing	0	Plastic housing
output	E	Axial M12 plastic connector output

available models

function	sensing distance (mm)	housing	cable axial exit
background suppression	50	plastic	MQ0/00-0E
	100		MQ1/00-0E

technical specifications

	MQ0/00-0E	MQ1/00-0E
nominal sensing distance	50 mm	100 mm
tolerance	+ 15 / 0 % di Sn	
emission	infrared (880 mm)	
hysteresis	≤ 1.5 % (white paper)	
repeatability	5 %	
supply voltage	20...253 Vac / 50 - 60 Hz	
no-load supply current	40 mA_{RMS}	
load current	5...300 mA_{RMS}	
inrush current	64 (Ton=10 ms)	
leakage current	≤ 1.5 mA_{RMS} (@ 250 Vca)	
output voltage drop	3 V max @ IL 300 mA	
output type	TRIAC	
switching frequency	25 Hz	
power on delay	200 ms	
power supply protections	impulsive over voltage	
operating temperature range	- 25°C...+ 70°C (without freeze)	
storage temperature	- 55°C...+80°C	
external light interference	3,000 lux (incandescence lamp), 10,000 lux (sunlight)	
temperature drift	≤ 10 % Sr	
EMC	according to EN50082-2; EN60947-5-2; EN50081-1	
LED indicator	yellow (light output status)	
protection degree	IP67 (EN60529)	
plug exit	M12 4 poli; Male	
housing material	PBT (barrel), PC (plug)	
optic material	PMMA	
tightening torque	1 Nm	
weight (approximate)	30 gr	

electrical diagrams of the connections

MQ background suppression

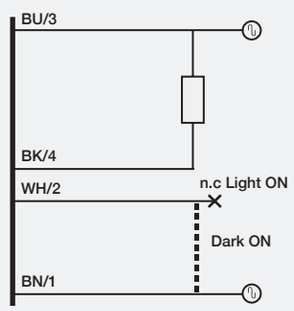

BN	brown
BU	blue
BK	black
WH	white
PK	pink
GY	gray

response diagrams

background suppression models

M*0/-** excess gain**

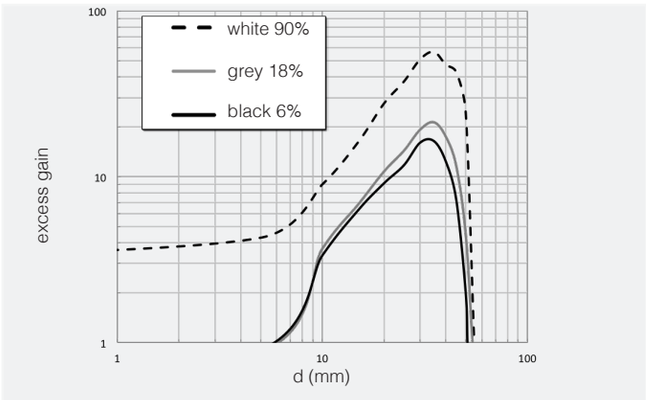

M*0/-** spot dimension**

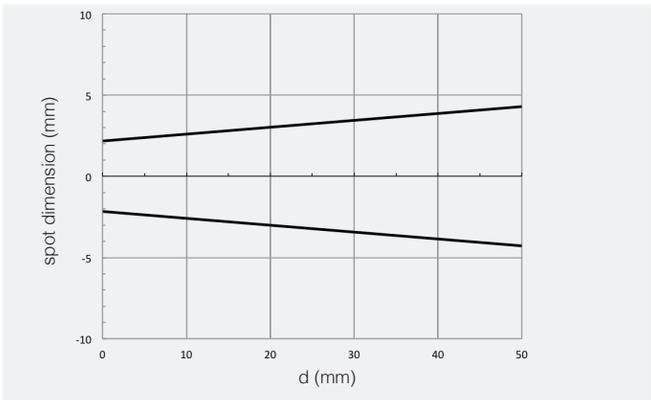

M*0/-** parallel displacement**

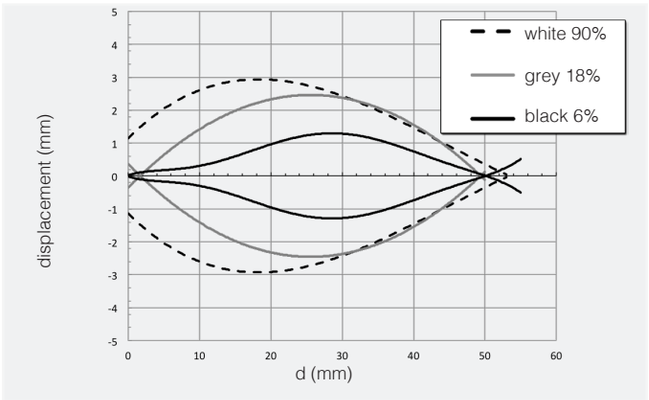

M*1/-** excess gain**

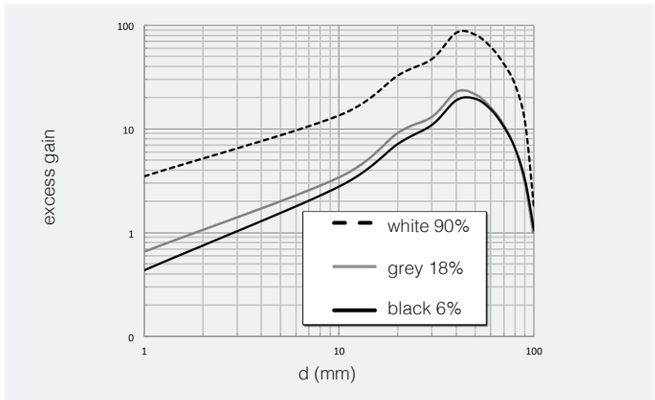

M*1/-** spot dimension**

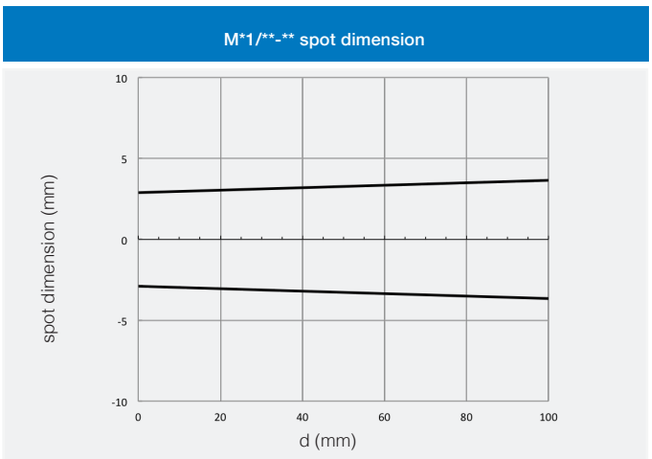

M*1/-** parallel displacement**

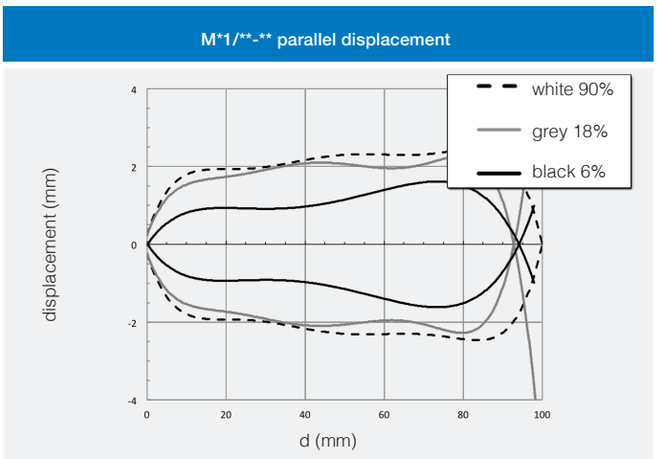

plug

MQ background suppression

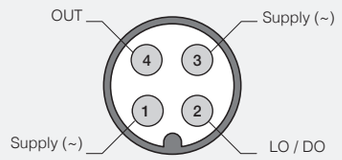

LO = Light ON
DO = Dark ON

dimensions (mm)

MQ0/00-0E; MQ1/00-0E

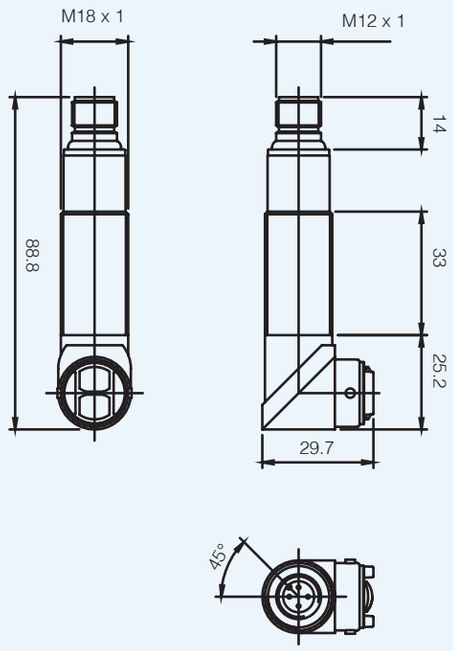

dimensions (mm)

accessories included in all plastic models

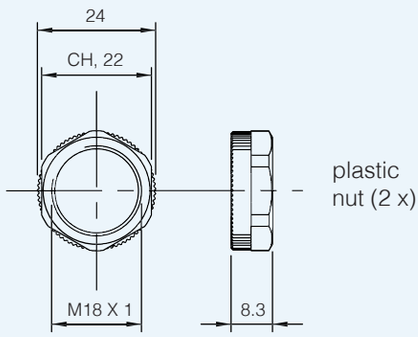

FQ series

M18 photoelectric sensors
with short body

features

- **Wide range of models: direct diffuse, retro-reflective, polarized and fixed-focus**
- **Direct diffuse models with short and long sensing distance, polarized and through beam**
- **Nickel brass or plastic housing**
- **NO+NC complementary output**
- **P67 protection degree**
- **Complete protection against electrical damages**
- **Approvals: CE**

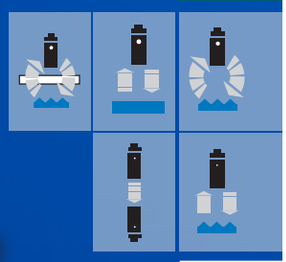

M18 short body

web contents

- **Application notes**
- **Photos**
- **Catalogue / Manuals**

code description

FQ I 7 / B P - 0 E

series	FQ	M18 photoelectric sensors with short body
emission	I	Infrared emission
	R	Visible red light emission
type	2	100 mm direct diffuse without sens. adj.
	3	100 mm direct diffuse with sens. adj.
	7	400 mm direct. diffuse with sens. adj.
	8	Direct reflection: 1200 mm (axial), 1000 mm (90°) with adj.
	C	6 m retro-reflective
	N	4.5 m retro-reflective with adj.
	L	Retroreflective for transparent objects 1.5 m
	H	Emitter without sens. adj.
	Z	20 m Receiver without sens. adj.
housing	0	Emitter without check
	B	Complementary output NO+NC
output logic	0	Emitter
	P	PNP output
	N	NPN output
housing material	0	Plastic housing, axial optic
	1	Metal housing, axial optic
	2	Plastic housing, right angle optic
	3	Metal housing, right angle optic
cable / plug output	E	M12 plastic plug cable exit
	A	2 m axial cable exit

available models

function	distance	adjustment	output	housing	axial models		right angle models	
					PNP NO + NC	NPN NO + NC	PNP NO + NC	NPN NO + NC
direct diffuse	100 mm	•	cable	plastic	FQR2/BP-0A	-	-	-
			M12 plug		FQR3/BP-0E	-	-	-
	400 mm		cable		FQI7/BP-0E	-	-	-
			M12 plug		FQI7/BP-1A	-	-	-
			cable	metal	FQI7/BP-1E	-	-	-
			M12 plug		-	FQI7/BP-1A	-	-
	1,200 mm (A) 1,000 mm (R)		cable	plastic	-	FQI8/BN-0A	-	-
			M12 plug		FQI8/BP-0E	FQI8/BN-0E	FQI8/BP-2E	-
			cable	metal	FQI8/BP-1A	-	-	-
retro-reflective	6 m		cable	plastic	FQIC/BP-0A	FQIC/BN-0A	FQIC/BP-2A	FQIC/BN-2A
			M12 plug		FQIC/BP-0E	-	-	-
polarized	4.5 m		cable		FQRN/BP-0A	-	FQRN/BP-2A	-
			M12 plug		FQRN/BP-0E	-	FQRN/BP-2E	-
			M12 plug	metal	FQRN/BP-1E	-	FQRN/BP-3E	
for trasparent objects detection	1.5 m		cable	plastic	-	-	FQRL/BP-2A	-
			M12 plug		FQRL/BP-0E	-	FQRL/BP-2E	-
			M12 plug	metal	FQRL/BP-1E	-	-	-
emitter	20 m	-	cable	plastic	FQIH/00-0A	-	-	-
			M12 plug		FQIH/00-0E	-	FQIH/00-2E	-
			M12 plug	metal	FQIH/00-1E	-	-	-
receiver			cable	plastic	FQIZ/BP-0A	-	-	-
			M12 plug		FQIZ/BP-0E	-	FQIZ/BP-2E	
			M12 plug	metal	FQIZ/BP-1E	-	-	-

electric diagrams of the connections

NO + NC complementary exit

NPN	PNP

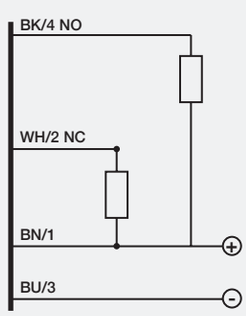

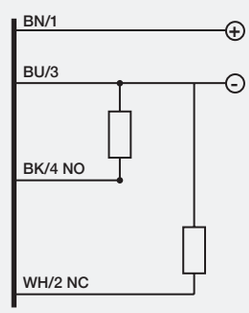

BN	brown
BU	blue
BK	black
WH	white
PK	pink
GY	gray

tecnical specification

	direct diffuse				retroreflective	polarized	for transpa-rent objects	through beam	
	FQR2	FQR3	FQI7	FQI8	FQIC	FQRN	FQRL [2]	FQIZ	FQIH
nominal sensing distance	100 mm		400 mm	1,2 m 1 m (90°)	6 m 4 m (90°)	4.5 m 3 m (90°)	0.1...1.5 m	20 m 2 m (90°)	
emission	red (660 nm)		infrared (880 nm)			red (660 nm)		infrared (880 nm)	
diffential travel	≤ 10 %								
repeatability	≤ 5 %								
operating voltage	10...30 Vcc								
ripple	≤ 10 %								
no-load supply current	≤ 30 mA								
load current	≤ 50 mA								
leakage current	≤ 10 µA								
output voltage drop	2 V max. @ IL = 50 mA								
output type	NPN or PNP NO + NC								
switching frequency	250 Hz								
power on delay	≤ 200 ms								
operating temperature range	- 25°C...+ 70°C (without freeze)								
power supply protections	polarity reversal, impulsive overvoltage								
output electrical protection	short circuit (autoreset), overvoltage								
temperature drift	≤ 10 % Sr								
protection degree	IP67 (EN60529) [1]								
EMC	in conformity with the EMC Directive according to EN 60947-5-2								
interference by external light	5,000 lux (incandescent lamp), 10,000 lux (sunlight)								
LEDs	yellow (Light status)rosso (uscita attivata)								
housing material	PBT (plastic model) /nicked plated brass (metallic model) / PC (cable exit)								
optic material	PC/PMMA								
tightening torque	1 Nm (plastic), 35 Nm (metallic)								
weight (approx)	20 g plug (40 g metallic version) / 60 g cable								

[1] Protection guaranteed only with plug cable well mounted [2] With RL 113G or RL 116

plug

emitter	complementary exit
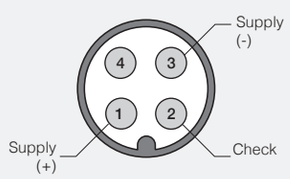	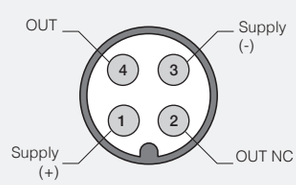

response diagrams

background suppression models

FQR2/FQR3 excess gain

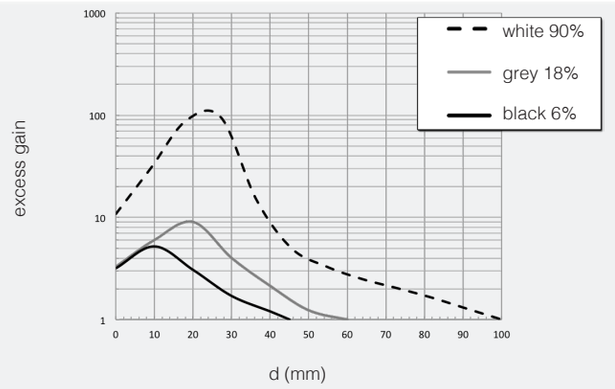

FQR2/FQR3 spot dimension

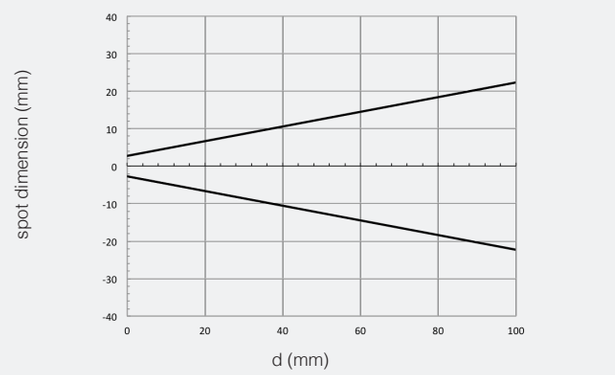

FQR2/FQR3 parallel displacement

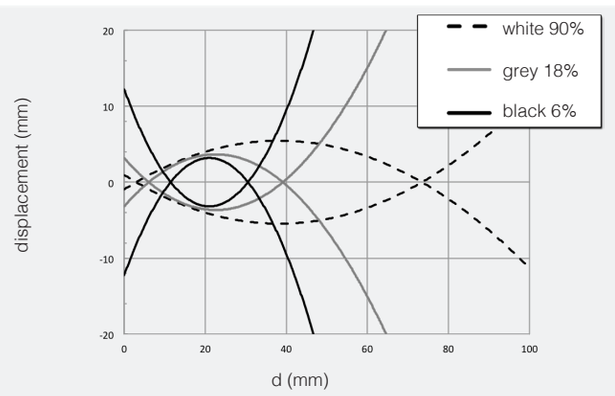

FQI7/B*-** excess gain

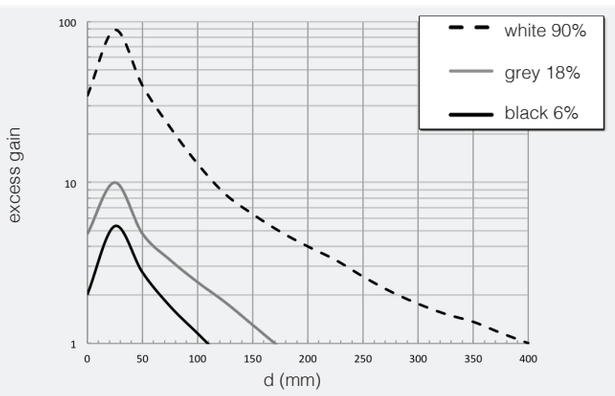

FQI7/B*-** spot dimension

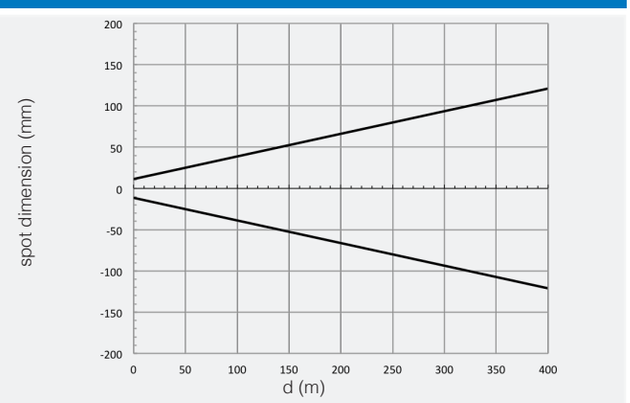

FQI7/B*-** parallel displacement

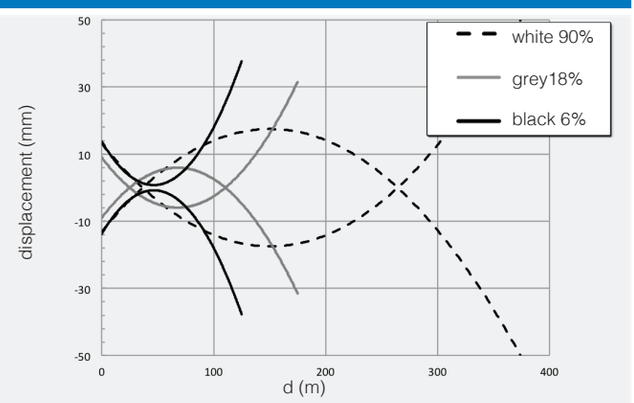

FQI8/B*-(0,1)* excess gain

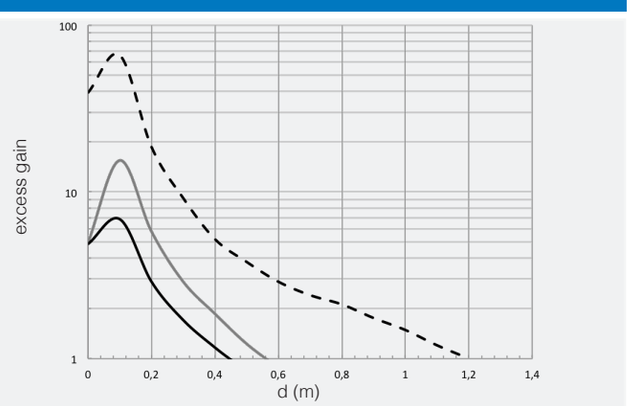

FQI8/B*-(0,1)* spot dimension

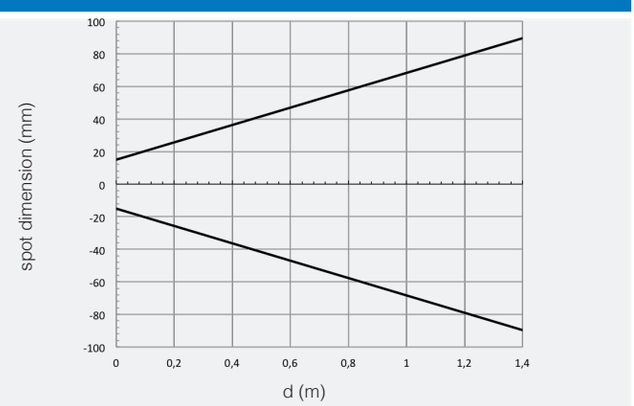

FQI8/B*-(0,1)* parallel displacement

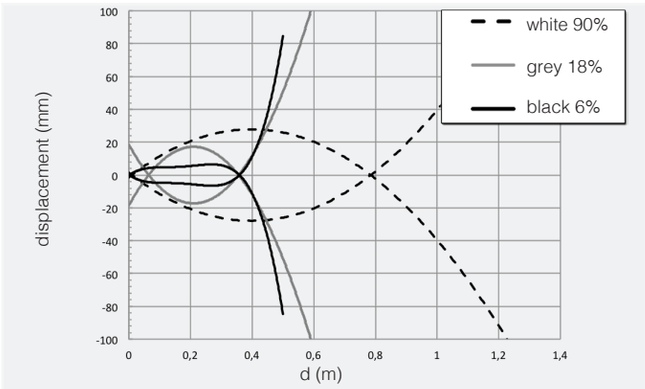

FQI8/B*-(2,3)* excess gain

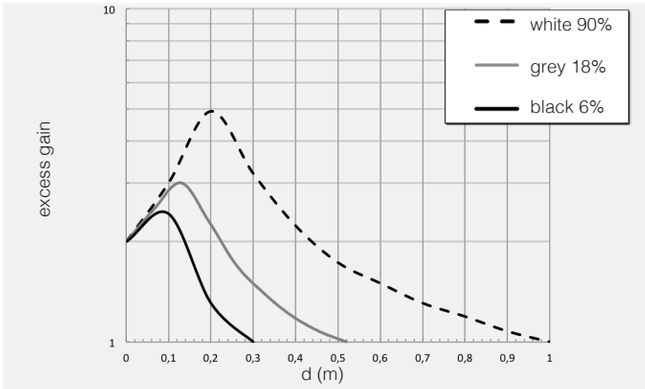

FQI8/B*-(2,3)* spot dimension

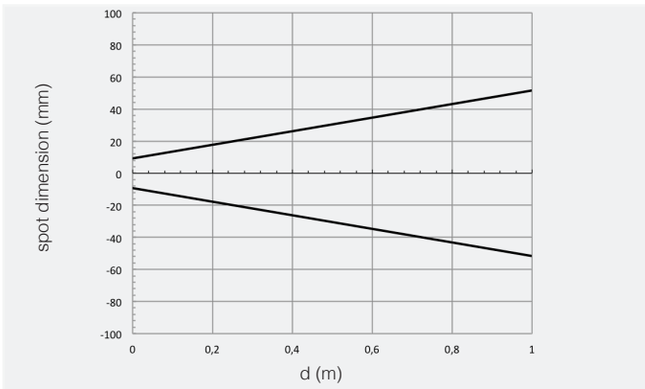

FQI8/B*-(2,3)* parallel displacement

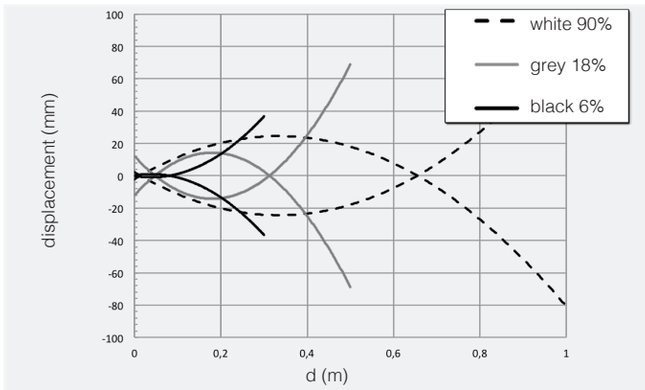

response diagrams

retro-reflective models (diagrams detected using RL110)

FQIC/B*-(0,1)* excess gain

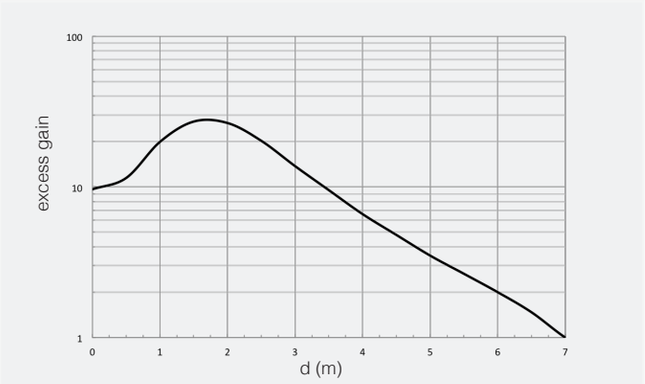

FQIC/B*-(0,1)* spot dimension

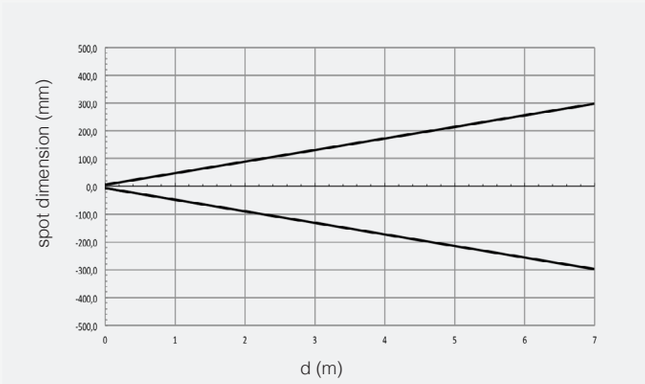

FQIC/B*-(0,1)* parallel displacement

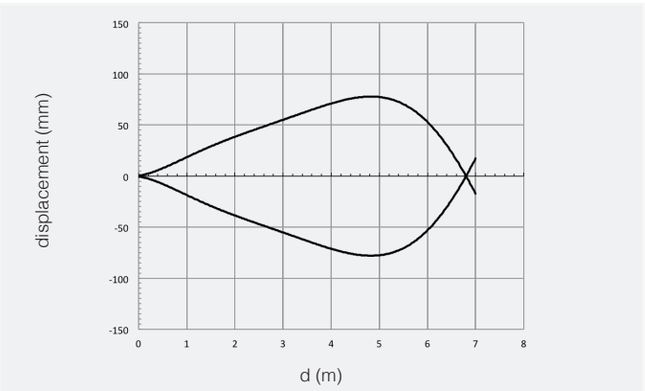

FQIC/B*-(2,3)* excess gain

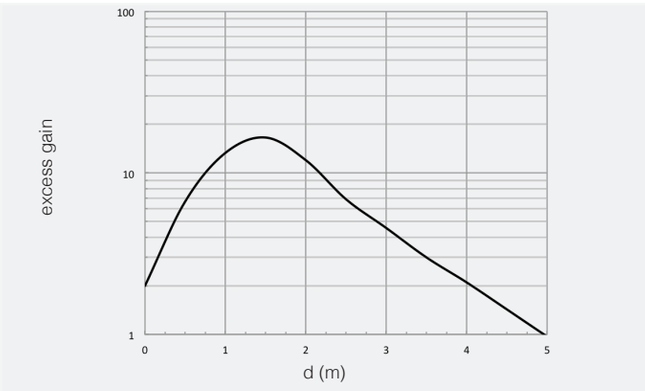

response diagrams

retro-reflective models

FQIC/B*-(2,3)* spot dimension

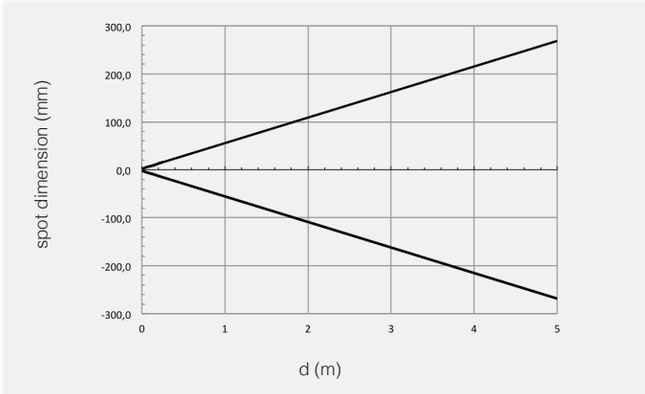

FQIC/B*-(2,3)* parallel displacement

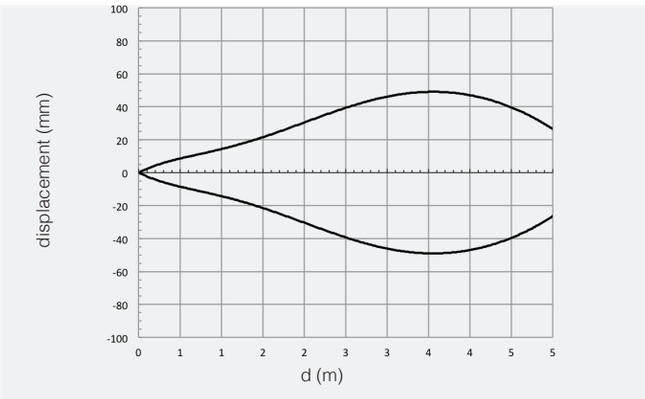

response diagrams

polarized models (diagrams detected using RL110)

FQRN/B*-(0,1)* excess gain

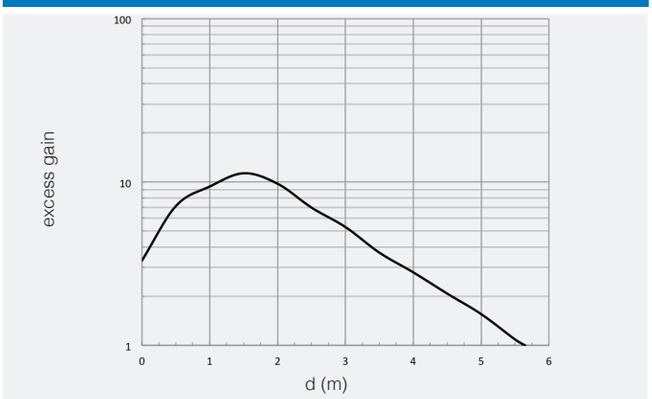

FQRN/B*-(0,1)* spot dimension

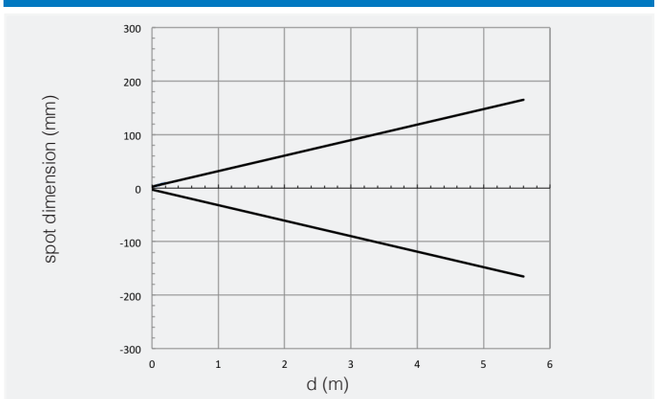

FQRN/B*-(0,1)* parallel displacement

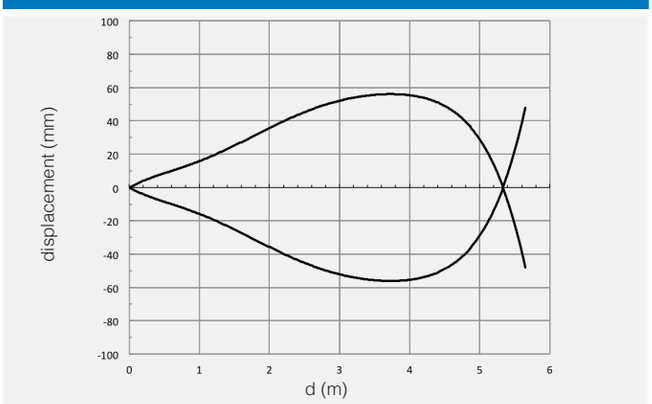

FQRN/B*-(2,3)* excess gain

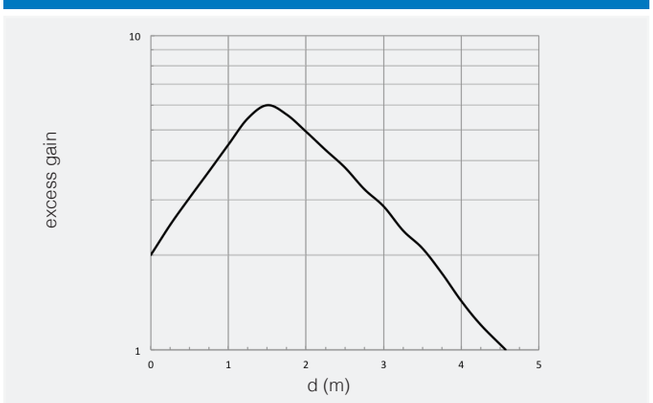

FQRN/B*-(2,3)* spot dimension

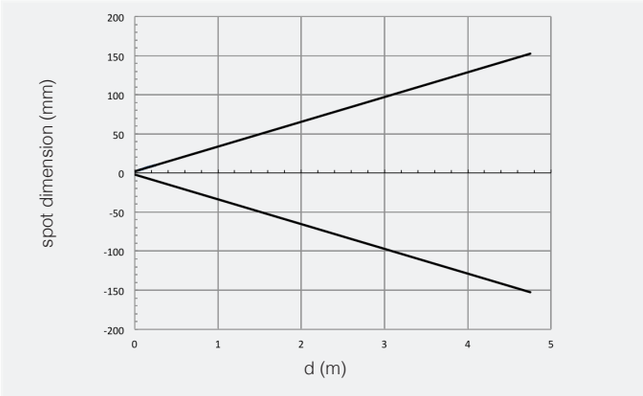

FQRN/B*-(2,3)* parallel displacement

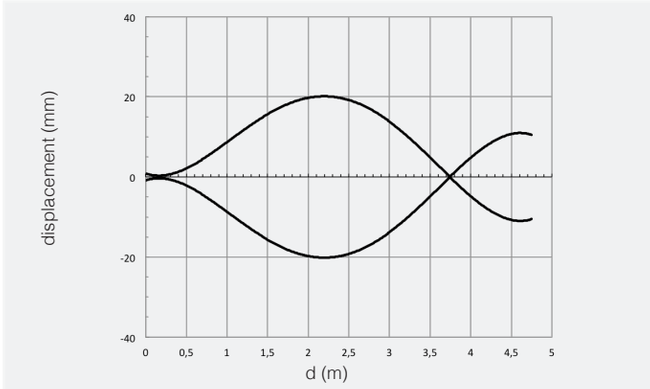

response diagrams

for transparent objects models (diagrams detected using RL110)

FQRL/B*-(0,1)* excess gain

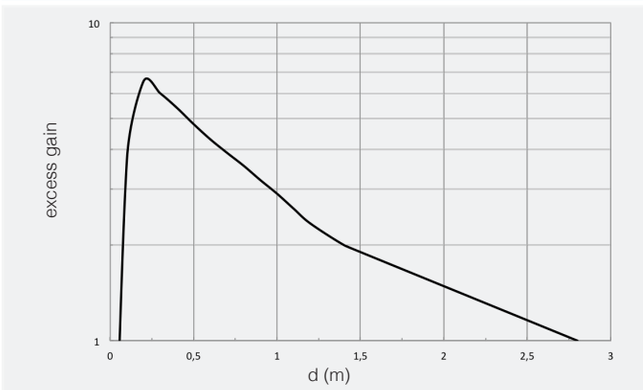

FQRL/B*-(0,1)* spot dimension

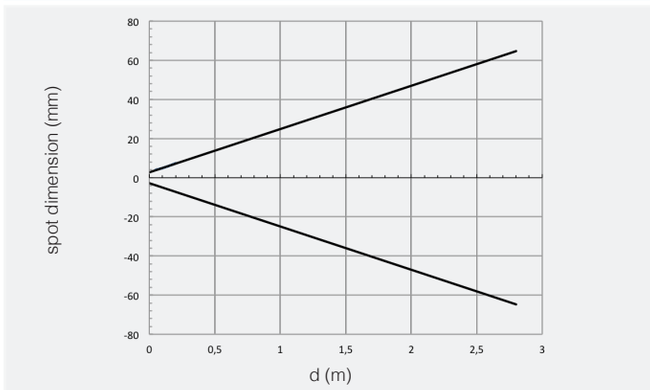

FQRL/B*-(0,1)* parallel displacement

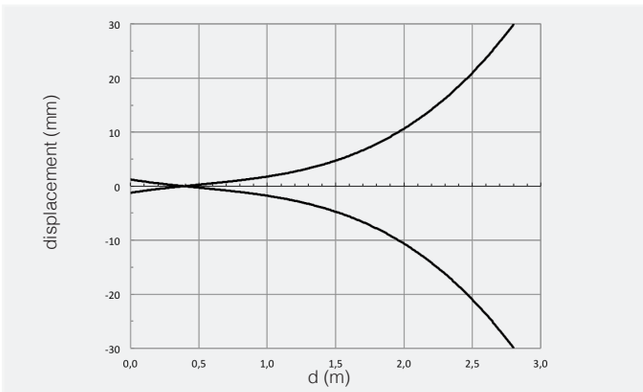

FQRL/B*-(2,3)* excess gain

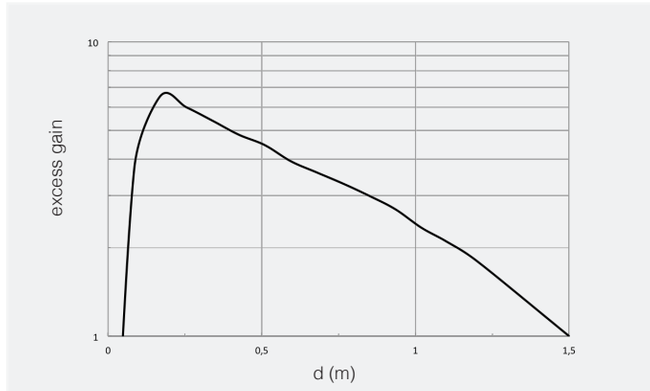

response diagrams

transparent models

FQRL/B*-(2,3)* spot dimension

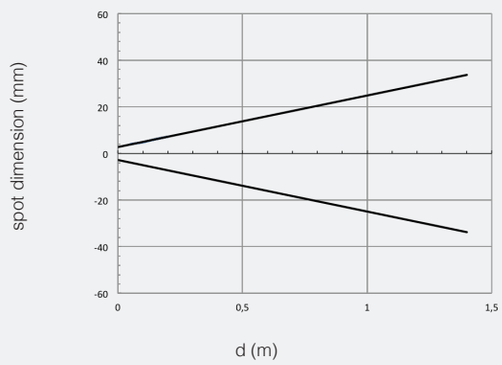

FQRL/B*-(2,3)* parallel displacement

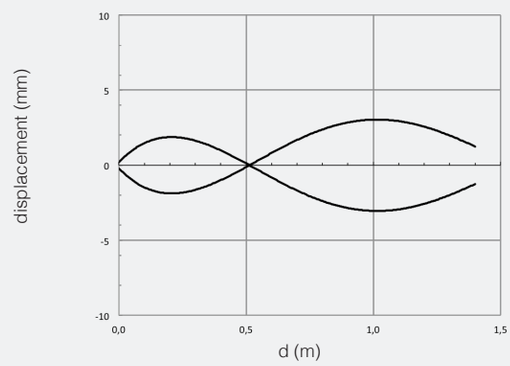

response diagrams

through-beam models

FQIH/00-*(0,1) - FQIZ/B*-*(0,1) excess gain

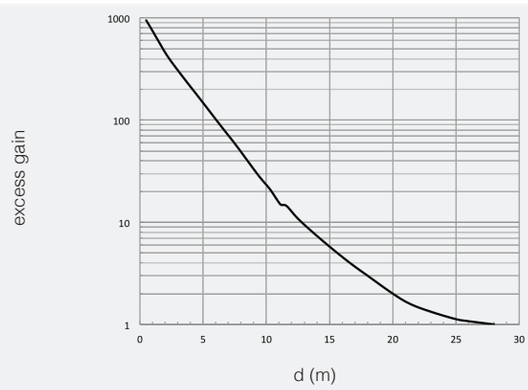

FQIH/00-*(0,1) - FQIZ/B*-*(0,1) dmensione spot

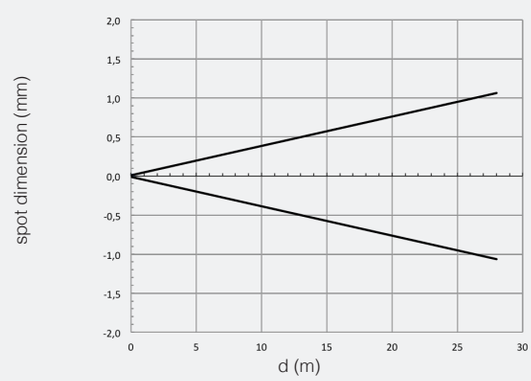

FQIH/00-*(0,1) - FQIZ/B*-*(0,1) parallel displacement

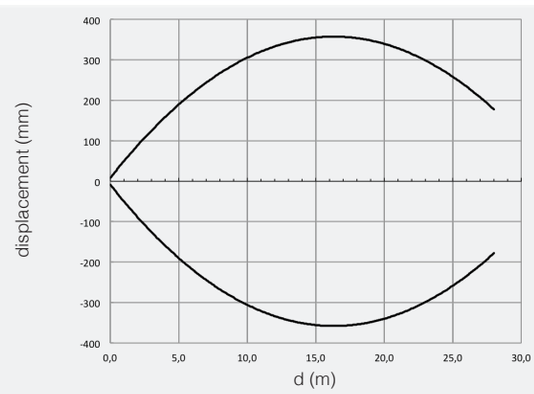

FQIH/00-(2,3)* - FQIZ/B*-(2,3)* excess gain

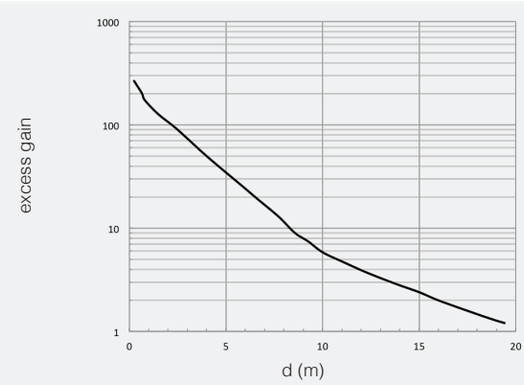

FQIH/00-*(0,1) - FQIZ/B*-*(0,1) spot dimension

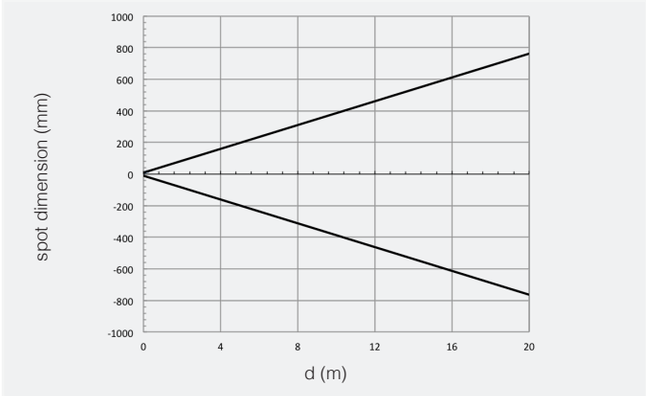

FQIH/00-*(0,1) - FQIZ/B*-*(0,1) parallel displacement

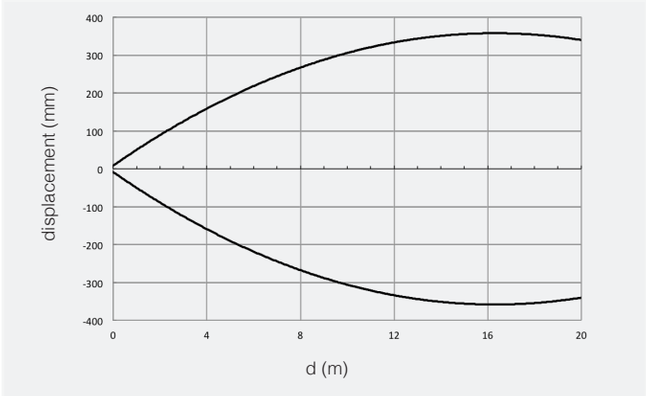

dimensions (mm)

FQ/**-0A; FQ**/**-1A**

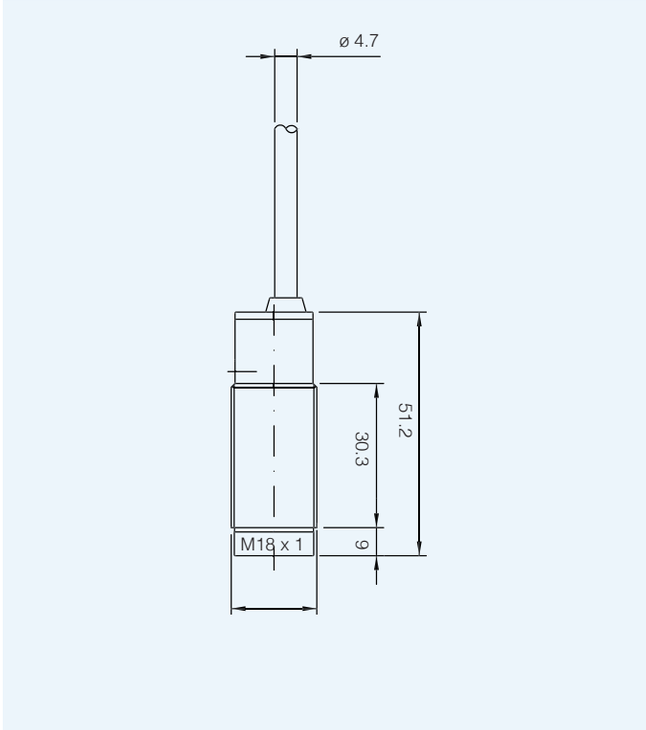

FQ/**-0E; FQ**/**-1E**

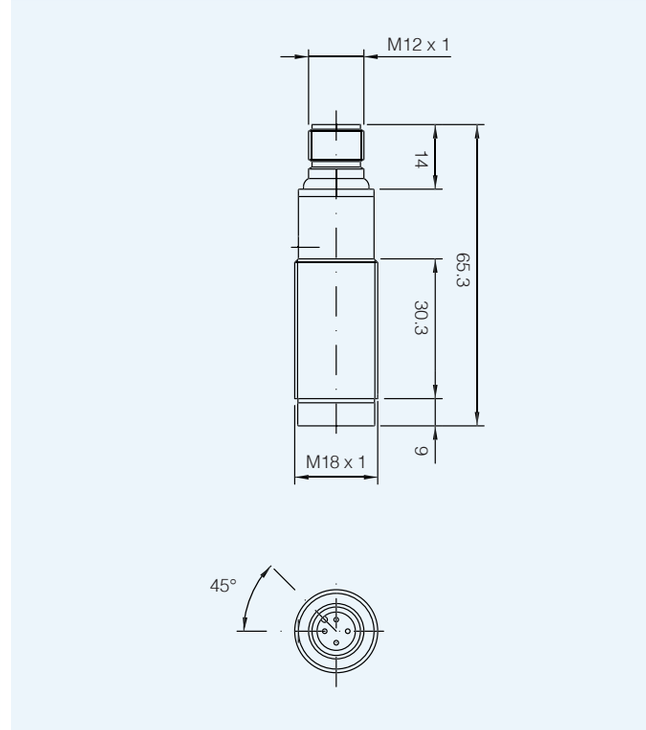

dimensions (mm)

FQ**/**-2A; FQ**/**-3A

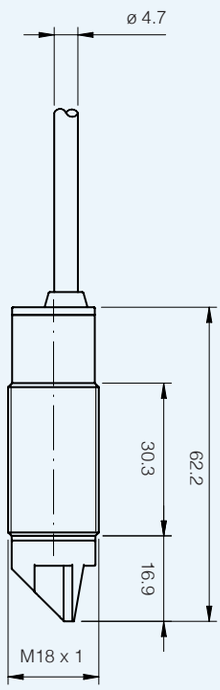

FQ**/**-2E; FQ**/**-3E

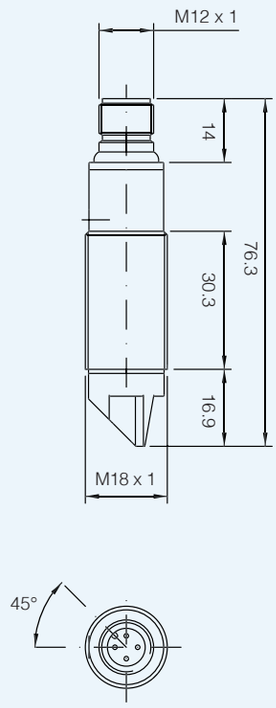

dimensions (mm)

accessories included in all plastic models

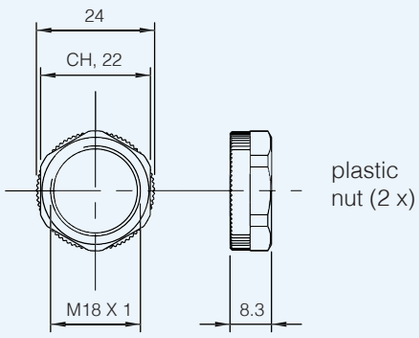

dimensions (mm)

accessories included in all metallic models

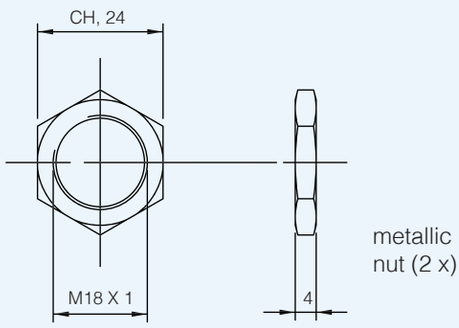

FF series

M18 IP69K photoelectric sensors
for harsh environments

features

- **AISI 316L (DIN 1.4404) stainless steel housing**
- **LED status indicators: yellow (output), green (teach-in function)**
- **IP67 - IP68 - IP69K protection degree**
- **Complete protection against electrical damages**
- **ATEX models, cat. 3, available on request**
- **Direct diffuse, polarized, through beam models**
- **Innovative teach-in function through sensor's housing**
- **Approvals: CE and cULus Listed**

web contents

- **Application notes**
- **Photos**
- **Catalogue / Manuals**

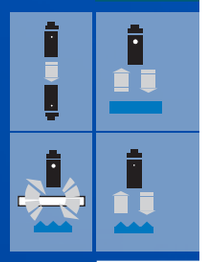

M18 IP69K
for harsh environments

code description(*)

FF R 3 / B P - 1 E ▢

series	FF	M18 photoelectric sensor for food + beverage applications
emission	R	Visible red LED emission
	I	Infrared LED emission
type	3	100 mm direct diffuse with sens. adjust.
	7	400 mm direct diffuse with sens. adjust.
	8	800 mm direct diffuse with sens. adjust.
	N	4.5 m polarized with sens. adjust.
	P	4.5 m polarized without sens. adjust.
	L	1 m retrorefl. for transp. objects with sens. adjust.
	H	Emitter
	Z	20 m receiver without sens. adjust.
output	B	NO+NC complementary output, 4 wires
	0	LO/DO selectable output, 4 wires - Emitter
	X	Emitter with Check
PNP / NPN	P	PNP output
	N	NPN output
	0	Emitter
housing	1	Stainless steel housing, axial optic
plug output	E	M12 plug exit
version	▢	Standard version
	V5	Smooth housing

(*) ATEX models available, contact our Sales Dept. for further information.

available models

model	housing	adjustment	distance	4 wires			
				NPN NO + NC	PNP NO + NC	NPN NO + NC	PNP NO + NC
direct diffuse	AISI 316L (DIN 1.4404)	Teach-In	100 mm	FFR3/0N-1E	FFR3/0P-1E	FFR3/BN-1E	FFR3/BP-1E
			400 mm	FFI7/0N-1E	FFI7/0P-1E	FFI7/BN-1E	FFI7/BP-1E
			800 mm	FFI8/0N-1E	FFI8/0P-1E	FFI8/BN-1E	FFI8/BP-1E
polarized			4 m	FFRN/0N-1E	FFRN/0P-1E	FFRN/BN-1E	FFRN/BP-1E
		-		FFRP/0N-1E	FFRP/0P-1E	FFRP/BN-1E	FFRP/BP-1E
retroreflective for transparent objects		Teach-In	0.1...1.5 m	FFRL/0N-1E	FFRL/0P-1E	FFRL/BN-1E	FFRL/BP-1E
receiver		-	20 m	FFIZ/0N-1E	FFIZ/0P-1E	FFIZ/BN-1E	FFIZ/BP-1E
emitter with check				FFIH/X0-1E			
emitter without check				FFIH/00-1E			

plug

M12 emitter without check

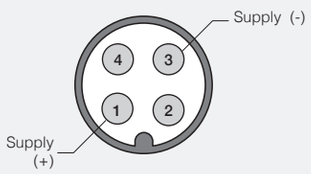

M12 emitter with check

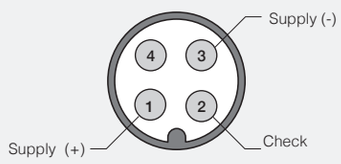

M12 diffuse reflection polarized receiver

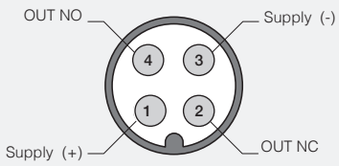

M12 diffuse reflection polarized receiver

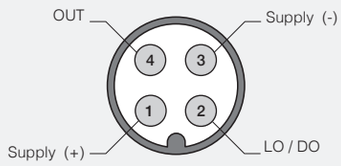

technical specification

	direct diffuse			polarized		for transparent objects	through beam	
	FFR3	FFI7	FFI8	FFRN	FFRP	FFRL	FFIZ	FFIH
nominal sensing distance	100 mm [1]	400 mm [2]	800 mm [3]	4.5 m [4]		0.1...1.5 m [5]	20 m	
emission	red (660 nm)	infrared (880 nm)		red (660 nm)			-	infrared (880 nm)
hysteresis	≤ 10 %							
repeatability	5 %							
tolerance	+ 15 / - 5 % Sn							
operating voltage	10...30 Vdc							
ripple	≤ 10 %							
no-load supply current	max 35 mA (at Val = 30 V)						25 mA	40 mA
load current	100 mA							
leakage current	≤ 10 µA @ Vmax							
output voltage drop	2 V max. IL = 100 mA							
output type	NPN o PNP selectable output LO / DO or complementary output NO + NC							
switching frequency	500 Hz						250 Hz	-
power on delay	200 ms							
temperature range	- 25°C...+ 80°C (without freeze)							
power supply protections	polarity reversal, transient							
output protection	short circuit (autoreset)							
sensitivity adjustment	Teach				-	Teach	-	-
temperature drift	10 % Sr							
protection degree	IP67; IP68 (1 m, 7 days); IP69K (according 40050 part 9) [6]							
EMC	in conformity with the EMC Directive according to EN 60947-5-2							
external light interference	5,000 lux (ncandescent lamp), 10,000 lux (sunlight))							
LEDs	Green: ON: teach function available OFF: teach function blocked Fast flashing: fine teach active Slow flashing: teach in progress Yellow: output state - excess gain (0 models) light State - excess gain (B models) [7]						Yellow: output state (0 models) light state (B models)	yellow (supply on)
housing material	stainless steel AISI316							
exit plug	PA12							
optic material	PA12							
tightening torque	50 Nm							
approvals	CE, cULus, IP69K, ECOLAB, Diversey							
weight (approximate)	60 gr							

[1] White target Kodak 90% reflection 100x100 mm [2] White target Kodak 90% reflection 200x200 mm [3] White target Kodak 90% reflection 400x400 mm [4] With RL110 reflector [5] With RL113G or RL116 reflector [6] Protection guaranteed only with plug cable well mounted [7] Yellow LED Fixed On: Excess Gain ≤ 2, Yellow LED flashing: Excess Gain <2

electrical diagrams of the connections

LO/DO selectable output

NPN output	PNP output
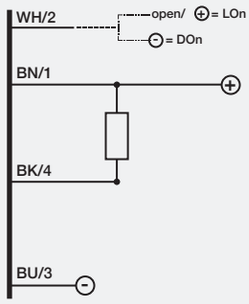	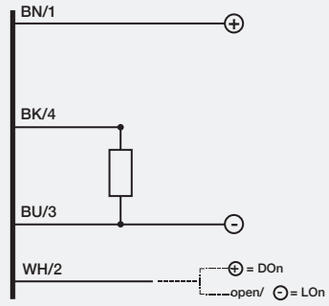

BN	brown
BU	blue
BK	black
WH	white
PK	pink
GY	gray

electrical diagrams of the connections

NO+NC complementary output

NPN output	PNP output
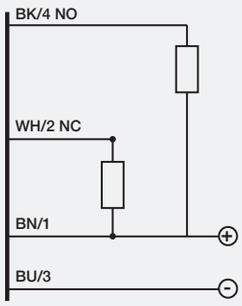	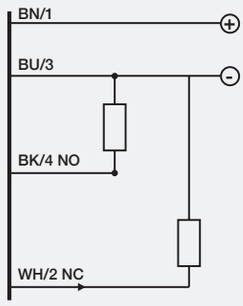

BN	brown
BU	blue
BK	black
WH	white
PK	pink
GY	gray

electrical diagrams of the connections

emitter with check

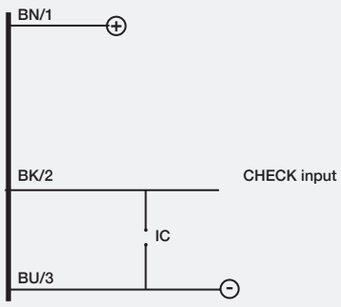

BN	brown
BU	blue
BK	black
WH	white
PK	pink
GY	gray

response diagrams

direct diffuse models

FFR3/**-1E excess gain

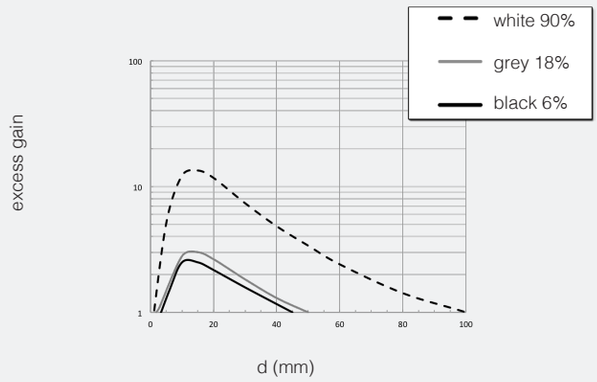

FFR3/**-1E spot dimension

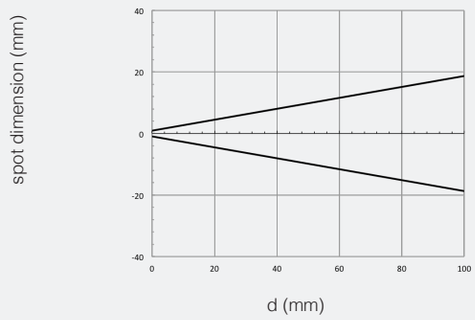

FFR3/**-1E parallel displacement

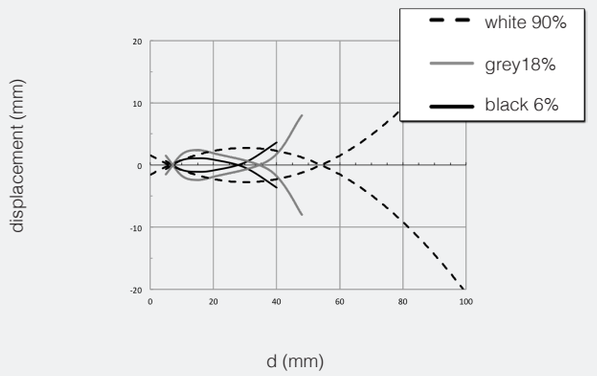

FFI7/**-** excess gain

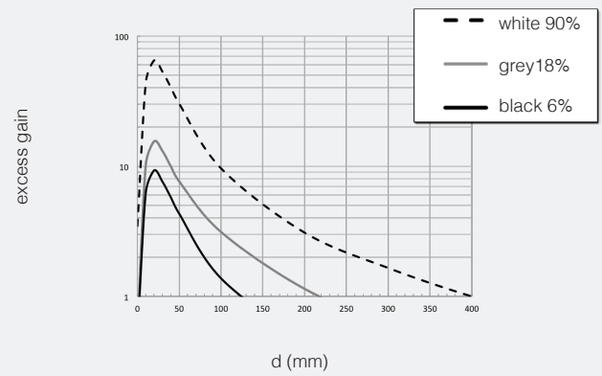

FFI7/**-** spot dimension

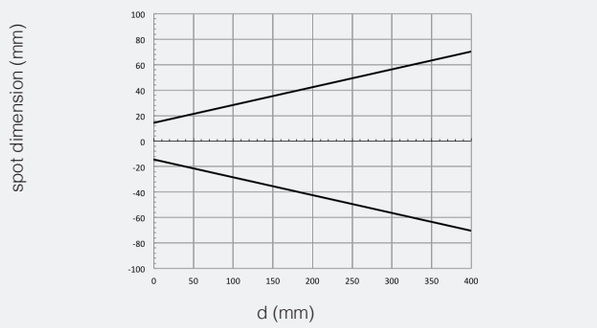

FFI7/**-** parallel displacement

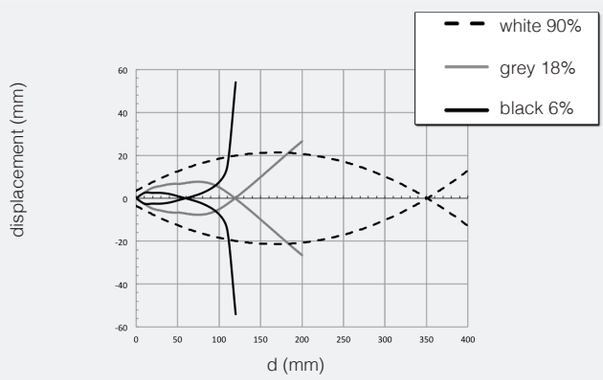

FFI8/**-** excess gain

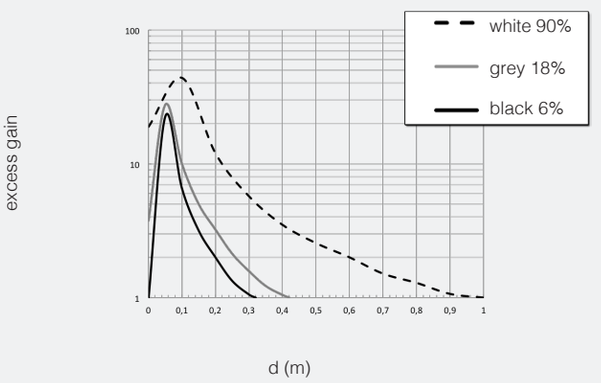

FFI8/**-** spot dimension

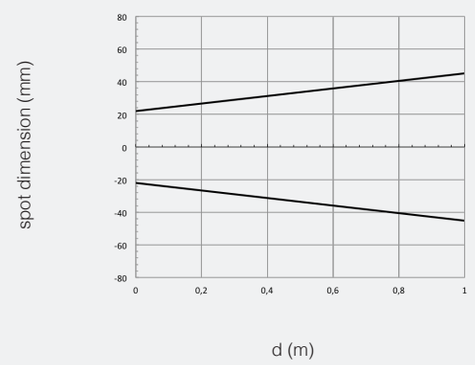

response diagrams

direct diffuse models

FFI8/-** parallel displacement**

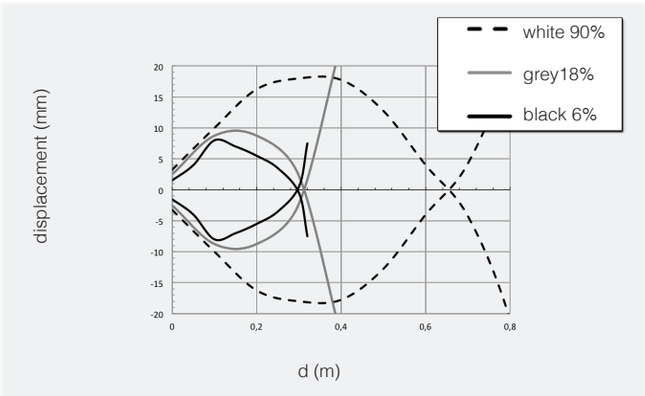

response diagrams

polarized models

FFRN/- 1E - FFRP/**- 1E excess gain**

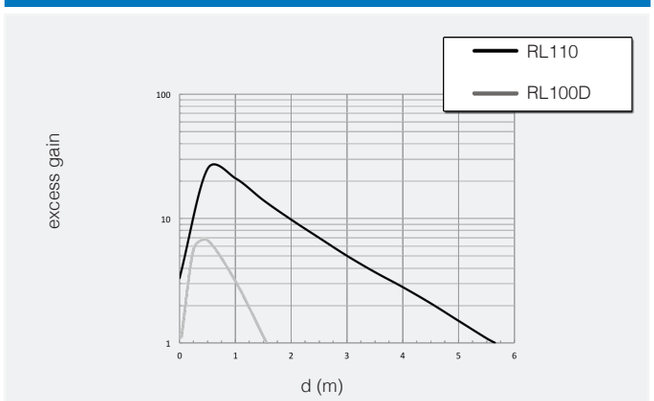

FFRN/- 1E - FFRP/**- 1E spot dimension**

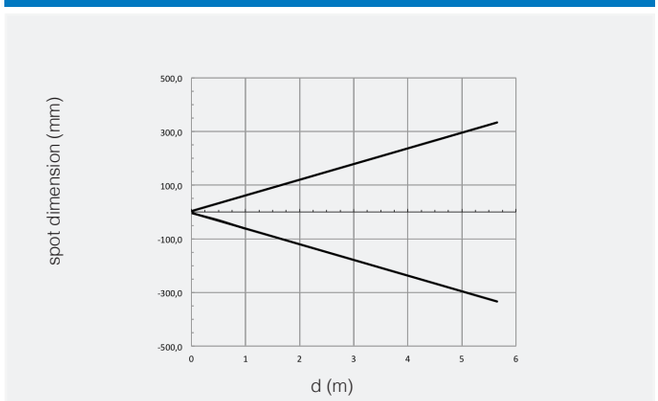

FFRN/- 1E - FFRP/**- 1E* parallel displacement**

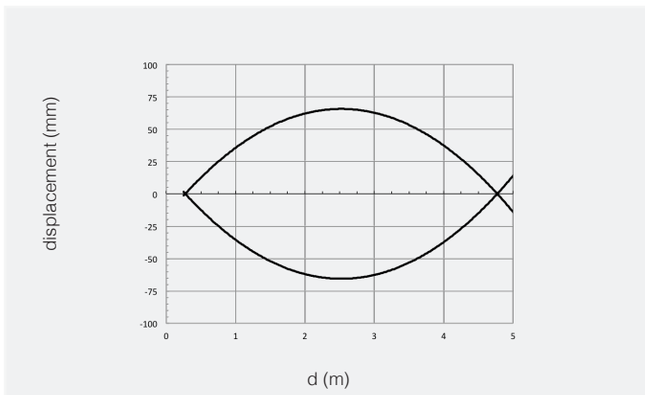

response diagrams

models for transparent objects

FFRL/-1E excess gain**

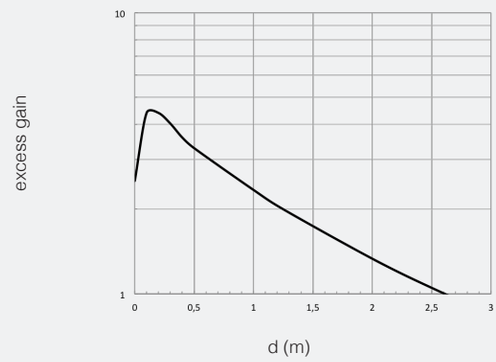

FFRL/-1E spot dimension**

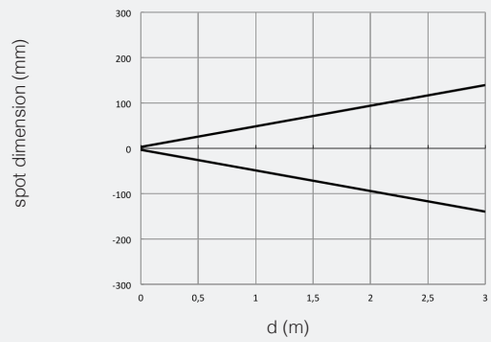

FFRL/-1E parralel displacement**

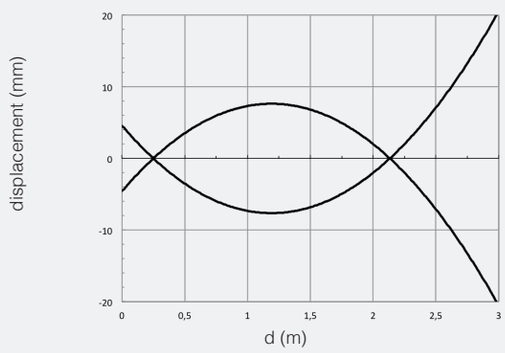

response diagrams

through beam models

FFIH/-1E + FFIZ/**-1E excess gain**

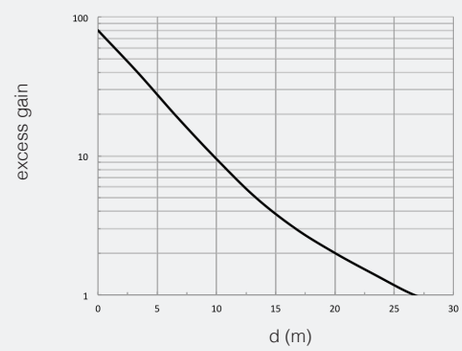

FFIH/-1E + FFIZ/**-1E spot dimension**

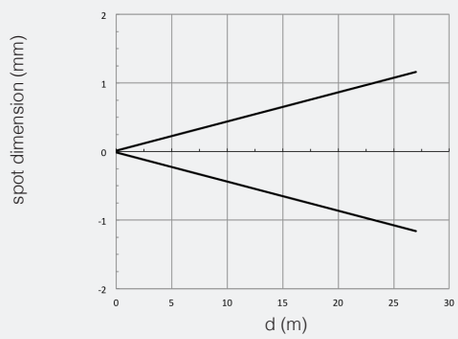

response diagrams

through beam models

FFIH/-1E + FFIZ/**-1E parallel displacement**

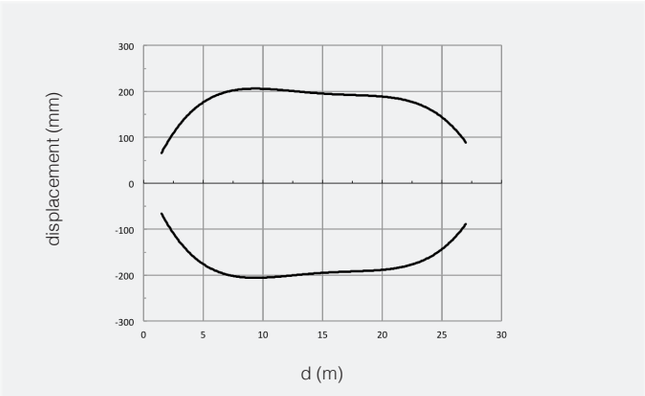

dimensions (mm)

FF/**-**

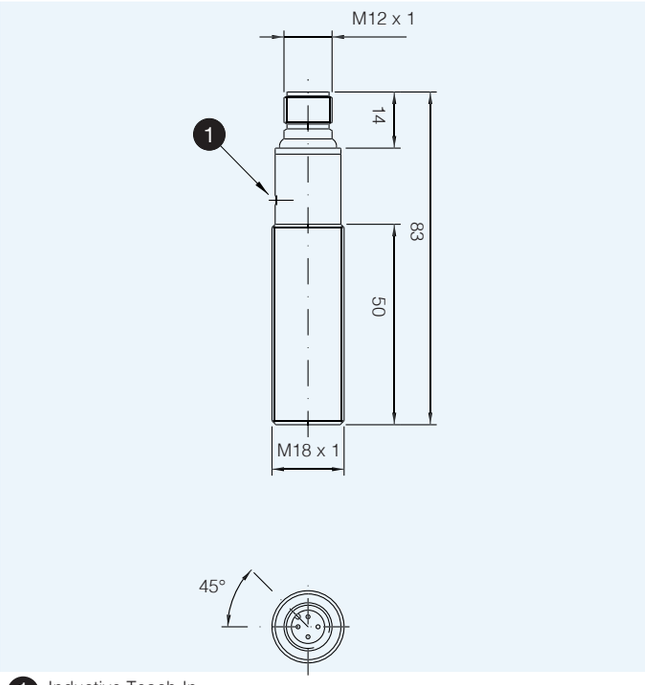

FF/**-1EV5**

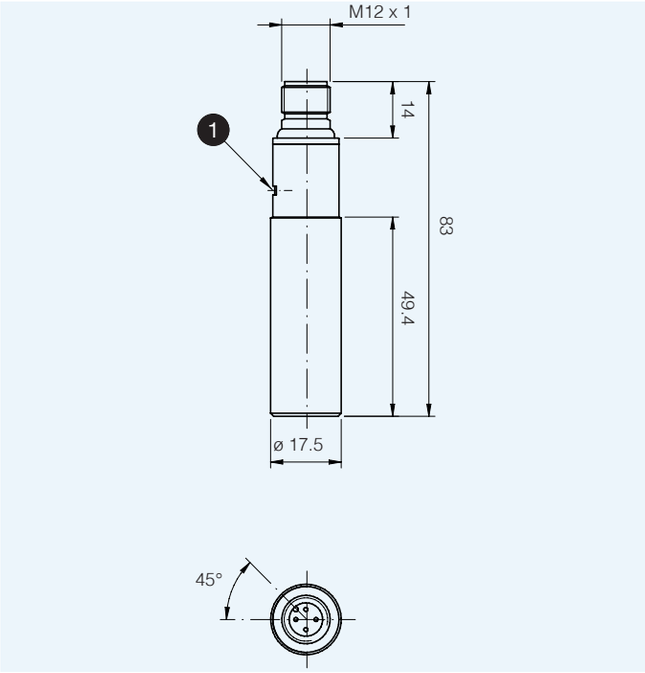

1 Inductive Teach-In

dimensions (mm)

accessories included in all metallic models

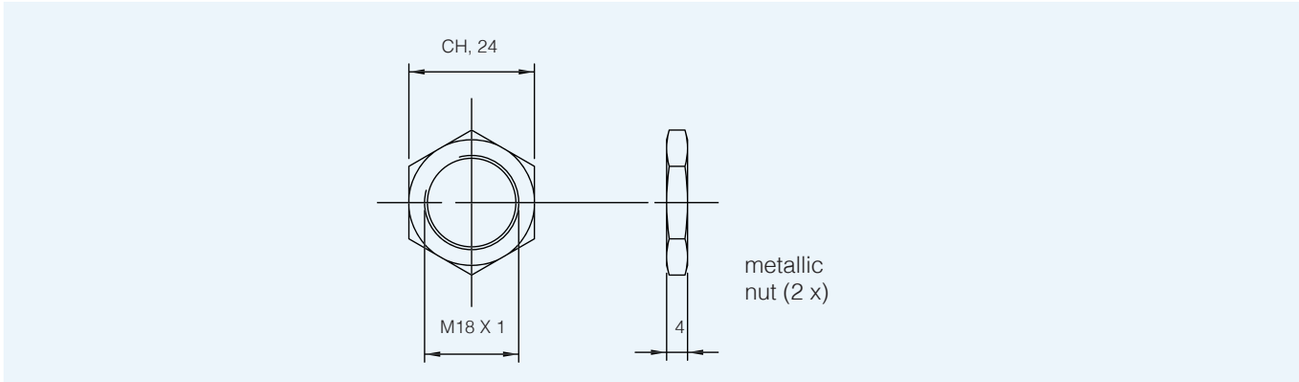

FFRS series

M18 IP69K photoelectric sensors with background suppression for harsh environments

features

- **Stainless steel housing AISI316L (DIN 1.4404)**
- **protection degree: IP68-IP69K**
- **Complete protection against electrical damages**
- **New sensitive adjustment through sensor housing: on object or on background**
- **Special model with reduced spot dimension and good performance on reflective material**
- **Approvals: CE and cULus Listed**

web contents

- **Application notes**
- **Photos**
- **Catalogue / Manuals**

M18 IP69K with background suppression

code description(*)

FF R S / B P - 1 E

series	FF	M18 photoelectric sensor with IP69K protection degree
emission	R	Visible red LED emission
function	S	Background suppression 30...130 mm
output	0	NO/NC selectable output, 4 wires
	B	NO+NC selectable output, 4 wires
PNP / NPN output	P	PNP output
	N	NPN output
housing	1	Stainless steel housing, axial optic
plug	E	M12 plug exit
version		Standard version
	V5	Smooth housing
	77	Special model for shiny object and 60...100 mm sensing distance
	V577	Special model with smooth housing for shiny object and 60...100 mm sensing distance

(*) ATEX models available, contact our Sales Dept. for further information.

available models

functions	housing	adjustment	distance (mm)	4 wires			
				NPN NO + NC	PNP NO + NC	NPN NO + NC	PNP NO + NC
background suppression	AISI 316L (DIN 1.4404) thread housing	Teach-In	30...130	FFRS/0N-1E	FFRS/0P-1E	FFRS/BN-1E	FFRS/BP-1E
	AISI 316L (DIN 1.4404) smooth housing			-	-	FFRS/BN-1EV5	FFRS/BP-1EV5
background suppression for shiny object	AISI 316L (DIN 1.4404) thread housing		60...100	FFRS/0N-1E77	FFRS/0P-1E77	FFRS/BN-1E77	FFRS/BP-1E77
	AISI 316L (DIN 1.4404) smooth housing			-	-	FFRS/BN-1EV577	FFRS/BP-1EV577

technical specification

	FFRS/**-**	FFRS/**-**77
nominal sensing distance	30...130 mm	60...100 mm
scanning range (Sd)	30...130 mm (white paper)	60...100 mm (white paper)
emission	red (660 nm)	
hysteresis	≤ 10 % (white paper)	≤ 15 % (white paper)
repeatability	10 %	
tolerance	+ 15 / - 5 % Sn	
supply voltage	10...30 Vdc	
ripple	≤ 10 %	
no-load supply current	50 mA (Val = 30 V)	
output current	100 mA	
leakage current	≤ 10 µA @ Vdc max	
output voltage drop	2 V max. IL = 100 mA	
output type	NPN or PNP selectable output LO/DO or complementary output NO + NC	
switching frequency	1kHz	400 Hz
power on delay	200 ms	
temperature range	- 25°C...+ 80°C (without freeze); short exposure with not working sensor 15 min to 100°C	
power supply protections	polarity reversal, transient	
output protection	short circuit (autoreset)	
protection degree	IP67; IP68 (1 m, 7 days); IP69K (according 40050 part 9) [1]	
EMC	in conformity with the EMC Directive according to EN 60947-5-2	
external light interference	5,000 lux (incandescent lamp), 10,000 lux (sunlight)	
LEDs	Green: ON: teach function available OFF: teach function blocked Fast flashing: teach in progress Yellow: output state (0 models) light State (B models)	
housing material	stainless steel	
exit plug	PA12	
optic material	PA12	
approvals	CE, cULus, IP68, IP69K, ECOLAB, Diversey	
weight (approximate)	60 gr	

[1] Protection guaranteed only with plug cable well mounted

response diagram

LO/DO selectable output

NPN output	PNP output
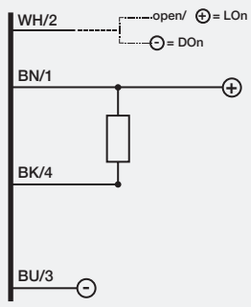	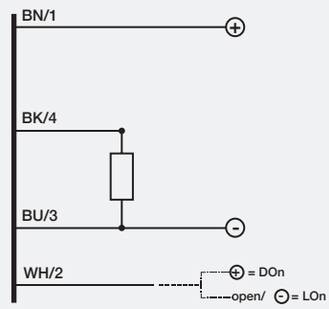

BN	brown
BU	blue
BK	black
WH	white

response diagram

NO+NC complementary output

NPN output	PNP output
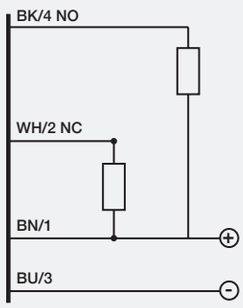	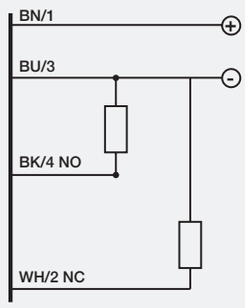

BN	brown
BU	blue
BK	black
WH	white

plug

M12 FF**/0*-**	M12 FF**/B*-**
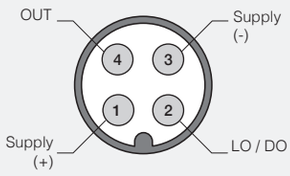	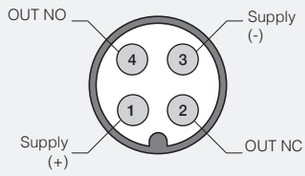

response diagrams

background suppression models

FFRS/**-** spot dimension

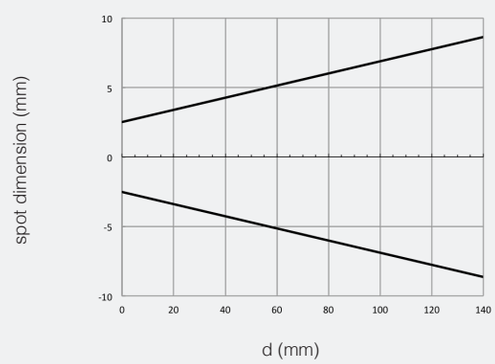

FFRS/**-** parallel displacement

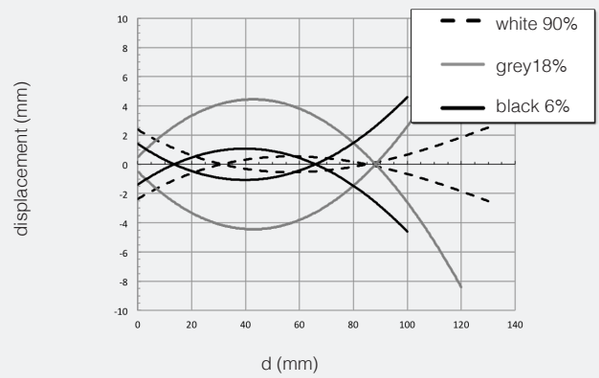

FFRS/**-** reduction of sensing distance

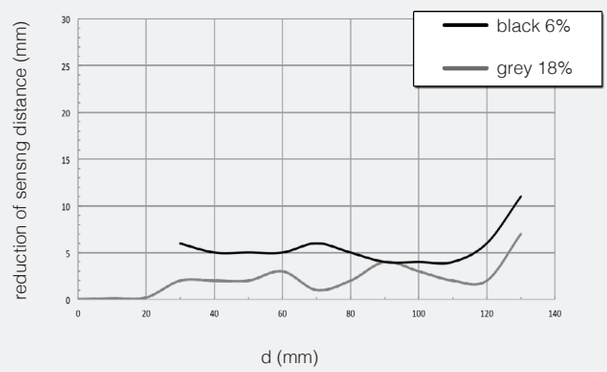

FFRS/**-**77 spot dimension

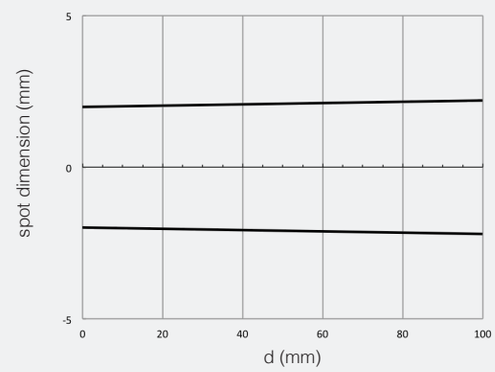

FFRS/**-**77 parallel displacement

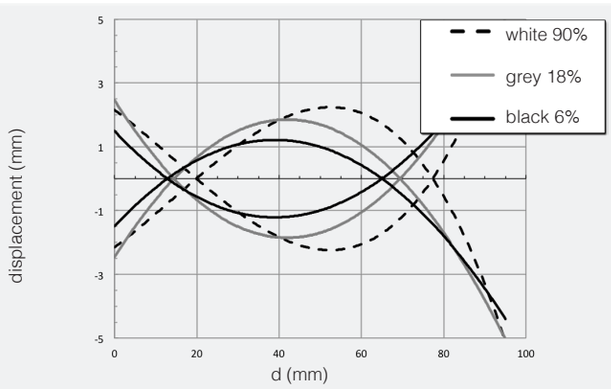

FFRS/**-**77 reduction of sensing distance

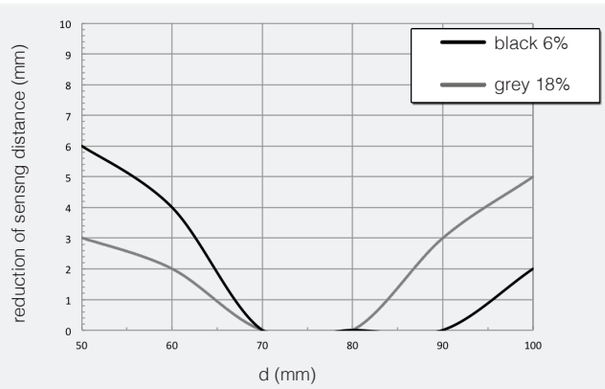

response diagrams

background suppression models

FFRS/**-** spot dimension

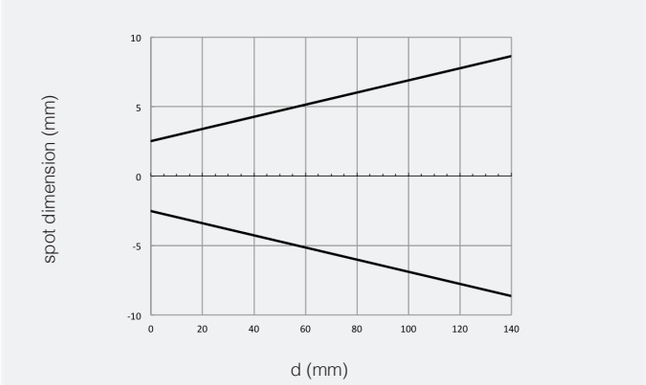

FFRS/**-** parallel displacement

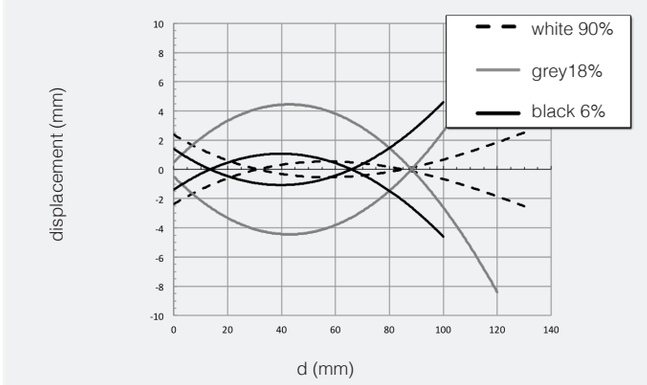

FFRS/**-** reduction of sensing distance

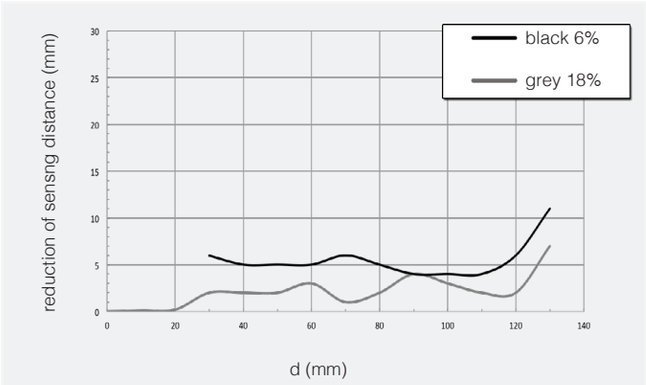

FFRS/**-**77 spot dimension

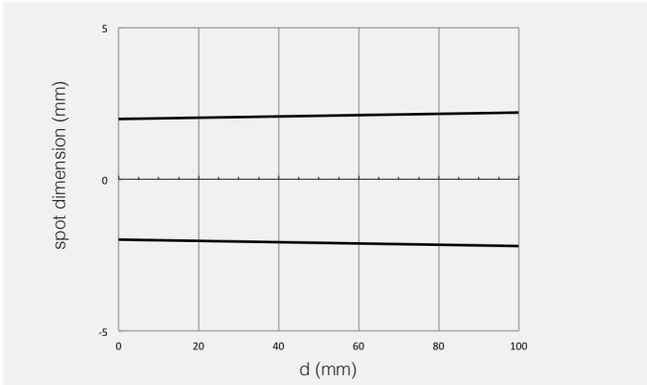

FFRS/**-**77 parallel displacement

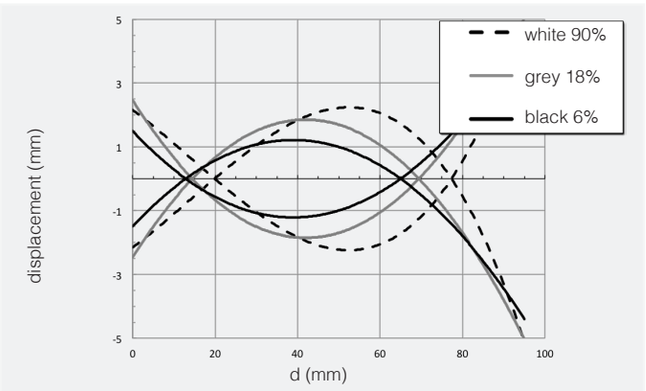

FFRS/**-**77 reduction of sensing distance

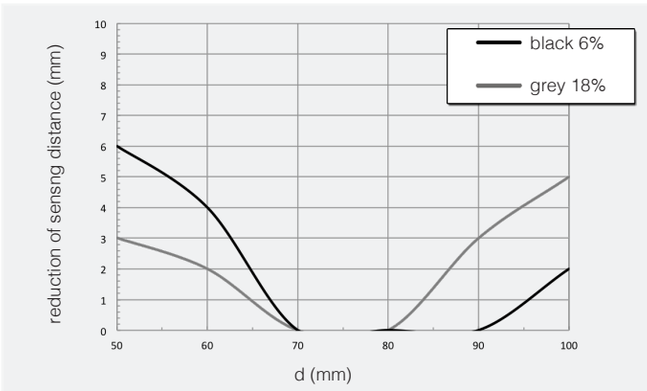

dimensions (mm)

FFRS/**-**	FFRS/**-V5
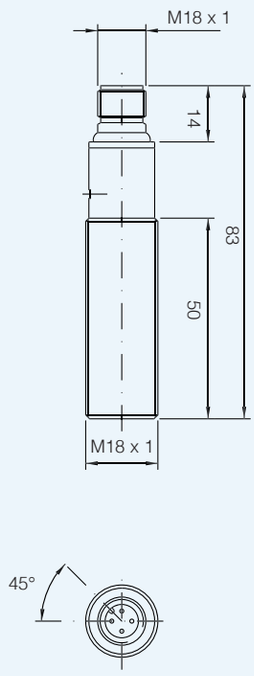	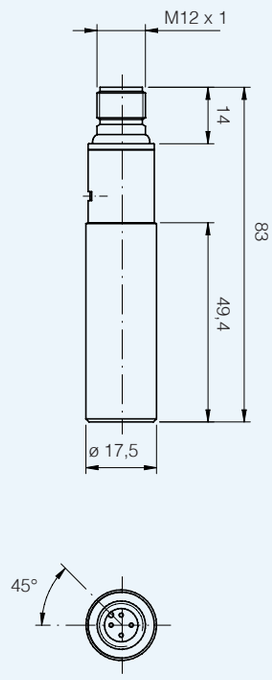

dimensions (mm)

accessories included in all metallic models

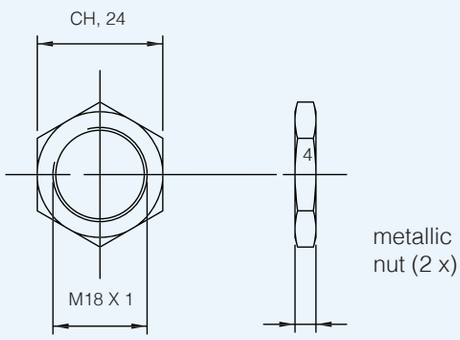

Cubic Photoelectric Sensor

QM series

Miniaturized photoelectric sensors
with high performance

features

- Cubic miniaturized photoelectric high-performance sensors with long sensing distance
- 2 kHz switching frequency, background suppression with mechanical adjustment
- Wide range of models: diffuse reflection with short, medium and long sensing distance, polarized, reflective for transparent objects, through-beam and background suppression
- Available with cable and M8 plug exit or with M8-M12 pig-tail
- Selectable LO/DO output state
- Completely filled with resin (except background suppression models)
- Complete protection against electrical damages

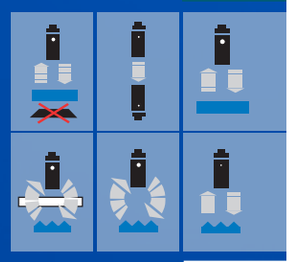

High performances miniaturized

web content

- Application notes
- Photos
- Catalogue / Manuals

code description

QM R 8 / 0 P - 0 A VE 80

series	QM	Miniaturized cubic photoelectric sensor 12.8x21x31.2 mm
emission	R	RED emission
	I	Infrared emission
type	B	Direct diffuse with sens. adj. 100 mm
	7	Direct diffuse with sens. adj. 400 mm
	8	Direct diffuse with sens. adj. 1,000 mm
	9	Direct diffuse with sens. adj. 1,500 mm
	N	5 m polarized with senisitive adjustment
	C	7 m reflective with senisitive adjustment
	G	0.05...1.5 m or 0.05...1.0 m for transparent objects with adjustment (R)
	L	0.4...4 m for transparent objects with adjustment
	HD	20 m or 30 m emitter + receiver kit with adjustment (R)
	H	Emitter with adjustment
	D	20 m or 30 m receiver without adjustement
	S	30...200 mm or 30...400 mm background suppression (R)
emitter	0	Emitter without check, LO/DO selectable
PNP / NPN output	0	Emitter
	P	PNP output
	N	NPN output
housing	0	Plastic housing
cable / plug output	A	2 m cable exit
	F	M8 4 pin plug cable exit
pig tail plug output		Standard model
	VE	M12 pig-tail output [1]
	VF	M8 3 pin pig tail output [1]
	VG	M8 4 pin pig tail output [1]
cable	80	20 cm cable lenght (pig-tail models)[1]
		Standard model

[1] pig-tail models

available models (*)

function	distance	emission	adjustment	output type	housing	models	
						PNP + NO / NC	NPN + NO / NC
direct diffuse	100 mm	red	●	cable	plastic	QMRB/0P-0A	QMRB/0N-0A
				connector M8		QMRB/0P-0F	QMRB/0N-0F
	400 mm			cable		QMR7/0P-0A	QMR7/07-0A
				connector M8		QMR7/0P-0F	QMR7/0N-0F
		IR		cable		QMI7/0P-0A	QMI7/07-0A
				connector M8		QMI7/0P-0F	QMI7/0N-0F
	1.000 mm	red		cable		QMR8/0P-0A	QMR8/0N-0A
				connector M8		QMR8/0P-0F	QMR8/0N-0F
	1.500 mm	IR		cable		QMI9/0P-0A	QMI9/0N-0A
				connector M8		QMI9/0P-0F	QMI9/0N-0F
polarized	5 m	red		cable		QMRN/0P-0A	QMRN/0N-0A
				connector M8		QMRN/0P-0F	QMRN/0N-0F
retroreflection	7 m	IR		cable		QMIC/0P-0A	QMIC/0N-0A
				connector M8		QMIC/0P-0F	QMIC/0N-0F
for transparent objects	0,05...1,5 m	red		cable		QMRG/0P-0A	QMRG/0N-0A
				connector M8		QMRG/0P-0F	QMRG/0N-0F
	0,05...1,0 m	IR		cable		QMIG/0P-0A	QMIG/0N-0A
				connettore M8		QMIG/0P-0F	QMIG/0N-0F
	0,4...4 m	red		cable		QMRL/0P-0A	QMRL/0N-0A
				connector M8		QMRL/0P-0F	QMRL/0N-0F
emitter	20 m			cable		QMRH/00-0A	
				connector M8		QMRH/00-0A	
receiver			-	cable		QMRD/0P-0A	QMRD/0N-0A
				connector M8		QMRD/0P-0F	QMRD/0N-0F
emitter + receiver			●	cable		QMRHD/0P-0A	QMRHD/0N-0A
				connector M8		QMRHD/0P-0F	QMRHD/0N-0F
emitter	30 m	IR		cable		QMIH/00-0A	
				connector M8		QMIH/00-0F	
receiver			-	cable		QMID/0P-0A	QMID/0N-0A
				connector M8		QMID/0P-0F	QMID/0N-0F
emitter + receiver			●	cable		QMIHD/0P-0A	QMIHD/0N-0A
				connector M8		QMIHD/0P-0F	QMIHD/0N-0F
background suppression	30 - 200 mm	red		cable		QMRS/0P-0A	QMRS/0N-0A
				connector M8		QMRS/0P-0F	QMRS/0N-0F
	30 - 400 mm	IR		cable		QMIS/0P-0A	QMIS/0N-0A
				connector M8		QMIS/0P-0F	QMIS/0N-0F

(*) pig tail available models:
QM**/0*-0AVE80 (pig-tail M12)
QM**/0*-0AVF80 (pig-tail M8, 3 wires)
QM**/0*-0AVG80 (pig-tail M8, 4 wires)

technical specification

direct diffuse models

	QMRB/0*-0*	QMR7/0*-0*	QMR8/0*-0*	QMI7/0*-0*	QMI9/0*-0*
					
nominal sensing distance	100 mm (1)	400 mm (1)	1,000 mm (2)	400 mm (1)	1,500 mm (2)
minimum sensing distance	-				
sensibility adjustment	●				
emission	red (660 nm)			infrared (850 nm)	
hysteresis	≤ 10 %				
repeatability	5 %				
rotary switch	●				
operating voltage	10...30 Vdc				
power on delay	≤ 100 ms				
ripple	≤ 10 %				
no-load supply current	≤ 30 mA			≤ 45 mA	
load current	≤ 100 mA				
supply current	≤ 10 µA				
output voltage drop	2 V max. @ 100 mA				
maximum load current	≤ 100 mA				
output type	PNP or NPN NO or NC				
switching frequency	1 kHz	2 kHz	1 kHz	2 kHz	1 kHz
power on delay	≤ 100 ms				
power supply protections	polarity reversal, over voltage pulses				
output protection	short circuit (auto reset), over voltage pulses				
operating temperature range	- 25°C...+ 70°C (without freeze)				
temperature range	- 30°C...+ 80°C				
temperature drift	10%				
protection degree	IP67 (EN60529) (3)				
EMC	in conformity with the EMC Directive according to EN 60947-5-2				
external light interference	3.000 lux (incandescence lamp), 10.000 lux (sunlight)				
LEDs	yellow (LO/DO output state) green (excess gain)				
housing material	PA66				
optic material	PMMA				
tightening torque	1 Nm (4)				
weight (approximate)	10 g connector / 52 g cable				

(1) White target Kodak 90% 200 x 200 mm (2) White target Kodak 90% 400 x 400 mm (3) Protection guaranteed only with plug cable well mounted (4) Screws, nuts and mounting brackets are not included with the sensor (accessories)

technical specification

background suppression models

	QMRS/0*-0*	QMIS/0*-0*
nominal sensing distance	30...200 mm [1]	30...400 mm [1]
minimum sensing distance	5 mm	
sensibility adjustment	●	
emission	red (630 nm)	infrared (850 nm)
hysteresis	≤ 10 %	
repeatability	5 %	
rotary switch	●	
operating voltage	10...30 Vdc	
power on delay	≤ 10 ms	
ripple	≤ 10 %	
no-load supply current	≤ 30 mA	≤ 45 mA
load current	≤ 100 mA	
supply current	≤ 10 µA	
output voltage drop	2 V max. @ 100 mA	
maximum load current	≤ 100 mA	
output type	PNP or NPN NO or NC	
switching frequency	1 kHz	
power on delay	≤ 100 ms	
power supply protections	polarity reversal, over voltage pulses	
output protection	short circuit (auto reset), over voltage pulses	
operating temperature range	- 25°C...+ 70°C (without freeze)	
temperature range	- 30°C...+ 80°C	
temperature drift	10%	
protection degree	IP67 (EN60529) [2]	
EMC	in conformity with the EMC Directive according to EN 60947-5-2	
external light interference	3,000 lux (incandescent lamp), 10,000 lux (sunlight)	
LEDs	yellow (output state LO/DO)	
housing material	PA66	
optic material	PMMA	
tightening torque	1 Nm [3]	
weight (approximate)	10 g connector / 52 g cable	

[1] White target Kodak 90% 200 x 200 mm [2] White target Kodak 90% 400 x 400 mm [3] Protection guaranteed only with plug cable well mounted [4] Screws, nuts and mounting brackets are not included with the sensor (accessories)

technical specification

models for transparent objects

	QMRG/0*-0*	QMIG/0*-0*	QMRL/0*-0*
			
nominal sensing distance	1.5 m	1 m	4 m
minimum sensing distance	0.05 m		0.4 m
sensibility adjustment	●		
emission	red (630 nm)	infrared (850 nm)	red (630 nm)
hysteresis	≤ 10 %		
repeatability	5 %		
rotary switch	●		
operating voltage	10...30 Vdc		
power on delay	≤ 100 ms		
ripple	≤ 10 %		
no-load supply current	≤ 30 mA	≤ 45 mA	≤ 30 mA
load current	≤ 100 mA		
supply current	≤ 10 µA		
output voltage drop	2 V max. @ 100 mA		
maximum load current	≤ 100 mA		
output type	PNP or NPN NO or NC		
switching frequency	2 kHz		
power on delay	≤ 100 ms		
power supply protections	polarity reversal, over voltage pulses		
output protection	short circuit (auto reset), over voltage pulses		
operating temperature range	- 25°C...+ 70°C (without freeze)		
temperature range	- 30°C...+ 80°C		
temperature drift	≤ 10%		
protection degree	IP67 (EN60529) [1]		
EMC	in conformity with the EMC Directive according to EN 60947-5-260947-5-2		
external light interference	3,000 lux (incandescent lamp), 10,000 lux (sunlight)		
LEDs	yellow (output state LO/DO)		
housing material	PA66		
optic material	PMMA		
tightening torque	1 Nm [2]		
weight (approximate)	10 g connector / 52 g cable		

[1] Protection guaranteed only with plug cable well mounted [2] Screws, nuts and mounting brackets are not included with the sensor (accessories)

technical specification

polarized models

	QMRN/0*-0*
nominal sensing distance	5 m [1]
minimum sensing distance	5 mm
sensibility adjustment	●
emission	red (630 nm)
hysteresis	≤ 10 %
repeatability	5 %
rotary switch	●
operating voltage	10...30 Vdc
power on delay	≤ 100 ms
ripple	≤ 10 %
no-load supply current	-
load current	≤ 100 mA
supply current	≤ 10 µA
output voltage drop	2 V max. @ 100 mA
maximum load current	≤ 100 mA
output type	PNP or NPN NO or NC
switching frequency	2 kHz
power on delay	≤ 100 ms
power supply protections	polarity reversal, over voltage pulses
output protection	short circuit (auto reset), over voltage pulses
operating temperature range	- 25°C...+ 70°C (without freeze)
temperature range	- 30°C...+ 80°C
temperature drift	≤ 10 %
protection degree	IP67 (EN60529) [2]
EMC	in conformity with the EMC Directive according to EN 60947-5-2
external light interference	3.000 lux (incandescent lamp), 10.000 lux (sunlight)
LEDs	yellow (output state LO/DO) green (excess gain)
housing material	PA66
optic material	PMMA
tightening torque	1 Nm [3]
weight (approximate)	10 g connector / 52 g cable

[1] With RL 110 reflector EG = 2; [2] protection guaranteed only with plug cable well mounted; [3] screws, nuts and mounting brackets are not included with the sensor (accessories).

technical specification

retroreflection models

	QMIC/0*-0*
nominal sensing distance	7 m [1]
minimum sensing distance	0,02 m @ RL 110
sensibility adjustment	●
emission	infrared (850 nm)
hysteresis	≤ 10 %
repeatability	5 %
rotary switch	●
operating voltage	10...30 Vdc
power on delay	≤ 100 ms
ripple	≤ 10 %
no-load supply current	≤ 45 mA
load current	≤ 100 mA
supply current	≤ 10 µA
output voltage drop	2 V max. @ 100 mA
maximum load current	≤ 100 mA
output type	PNP or NPN NO or NC
switching frequency	2 kHz
power on delay	≤ 100 ms
power supply protections	polarity reversal, over voltage pulses
output protection	short circuit (auto reset), over voltage pulses
operating temperature range	- 25°C...+ 70°C (without freeze)
temperature range	- 30°C...+ 80°C
temperature drift	≤ 10 %
protection degree	IP67 (EN60529) [2]
EMC	in conformity with the EMC Directive according to EN 60947-5-2
external light interference	3.000 lux (incandescent lamp), 10.000 lux (sunlight)
LEDs	yellow (output state LO/DO) green (excess gain)
housing material	PA66
optic material	PMMA
tightening torque	1 Nm [3]
weight (approximate)	10 g connector / 52 g cable

[1] With RL 110 reflector EG = 2; [2] protection guaranteed only with plug cable well mounted; [3] screws, nuts and mounting brackets are not included with the sensor (accessories).

technical specification

through beam models

	QMRH/0*-0*	QMRD/0*-0*	QMIH/0*-0*	QMID/0*-0*
				
nominal sensing distance	20 m [1]		30 m [1]	
minimum sensing distance	-			
sensibility adjustment	●			
emission	red (630 nm)	-	infrared (850 nm)	-
hysteresis	≤ 10 %			
repeatability	5 %			
rotary switch	-	●	-	●
operating voltage	10...30 Vdc			
power on delay	≤ 100 ms			
ripple	≤ 10 %			
no-load supply current	≤ 30 mA		≤ 45 mA	
load current	-	≤ 100 mA	-	≤ 100 mA
supply current	-	≤ 10 µA	-	≤ 10 µA
output voltage drop	-	2 V max. @ 100 mA	-	2 V max. @ 100 mA
maximum load current	-	≤ 100 mA	-	≤ 100 mA
output type	-	PNP or NPN NO or NC	-	PNP or NPN NO or NC
switching frequency	2 kHz	-	2 kHz	-
power on delay	≤ 100 ms			
power supply protections	-	polarity reversal, over voltage pulses	-	polarity reversal, over voltage pulses
output protection	-	polarity reversal, over voltage pulsesi	-	polarity reversal, over voltage pulses
operating temperature range	- 25°C...+ 70°C (without freeze)			
temperature range	- 30°C...+ 80°C			
temperature drift	≤ 10 %			
protection degree	IP67 (EN60529) [2]			
EMC	in conformity with the EMC Directive according to EN 60947-5-2			
external light interference	3,000 lux (incandescent lamp), 10,000 lux (sunlight)			
LEDs	yellow (output state LO/DO), 10,000 lux (sunlight)			
housing material	PA66			
optic material	PMMA			
tightening torque	1 Nm [3]			
weight (approximate)	10 g connector / 52 g cable			

[1] White target Kodak 90% 200 x 200 mm [2] Protection guaranteed only with plug cable well mounted [3] Screws, nuts and mounting brackets are not included with the sensor (accessories)

response diagrams

LO/DO selectable output

NPN output

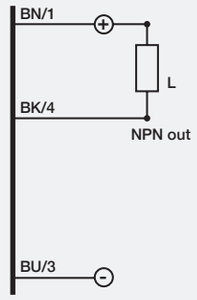

PNP output

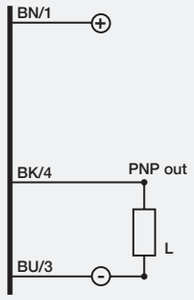

emitter

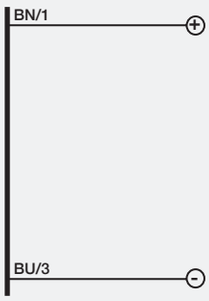

BN	brown
BU	blue
BK	black
WH	white

plug

M8 4 pin	QMR*/0*-0F & QMR*/0*-0AVG0 QMI*/0*-0F & QMI*/0*-0AVG0	M12 4 pin (pig tail)	QMR*/0*-0AVE80 QMI*/0*-0AVE80	M8 3 pin (pig tail)	QMR*/0*-0AVF80 QMI*/0*-0AVF80

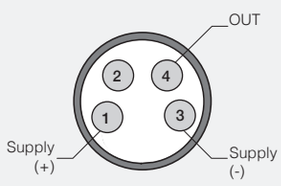

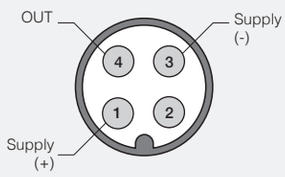

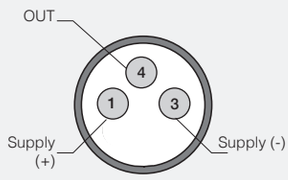

M8 4 pin	QM*H/00-0F & QM*H/00-0AVG80	M12 4 pin (pig tail)	QM*H/0*-0AVE80	M8 3 pin (pig tail)	QM*H/0*-0AVF80

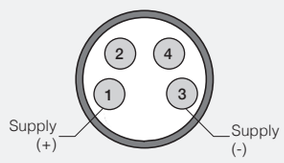

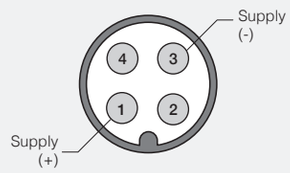

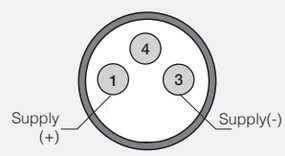

response diagrams

direct diffuse models

QMRB/**-* excess gain

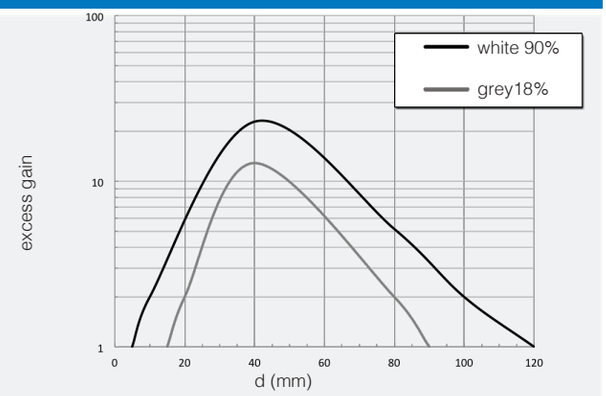

QMRB/**-* spot dimension

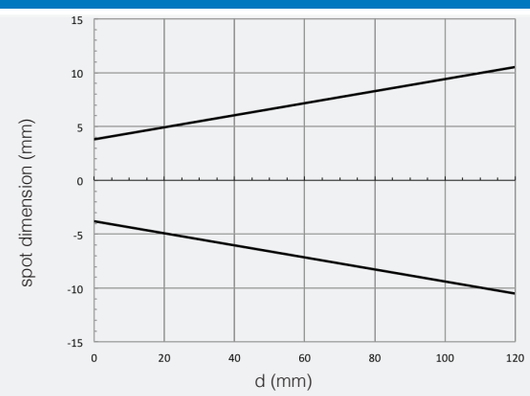

QMRB/**-* parallel displacement

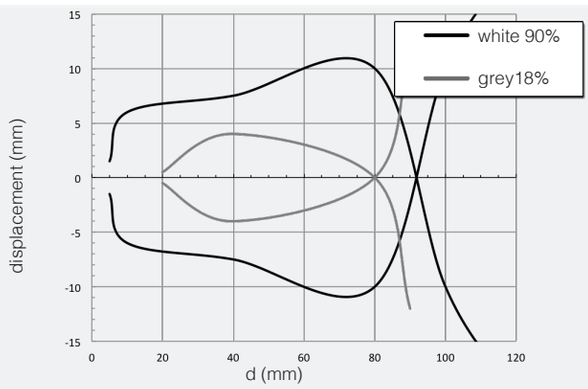

QMR7/**-* excess gain

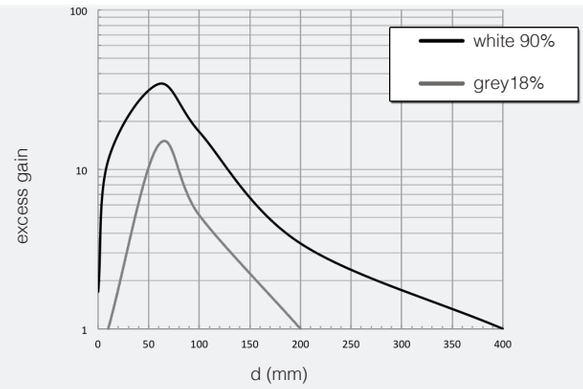

QMR7/**-* spot dimension

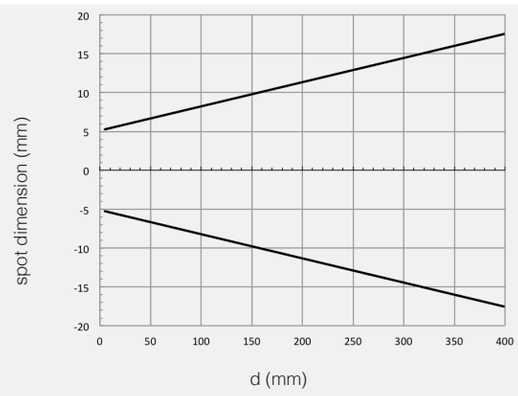

QMR7/**-* parallel displacement

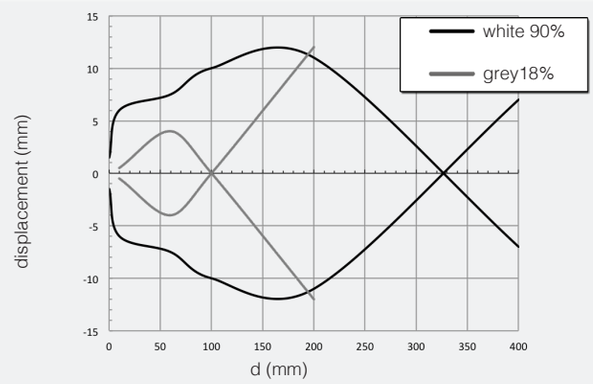

response diagrams

direct diffuse models

QMR8/**-* excess gain

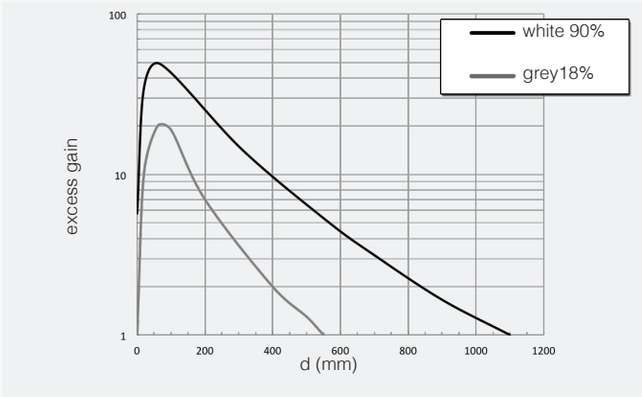

QMR8/**-* spot dimension

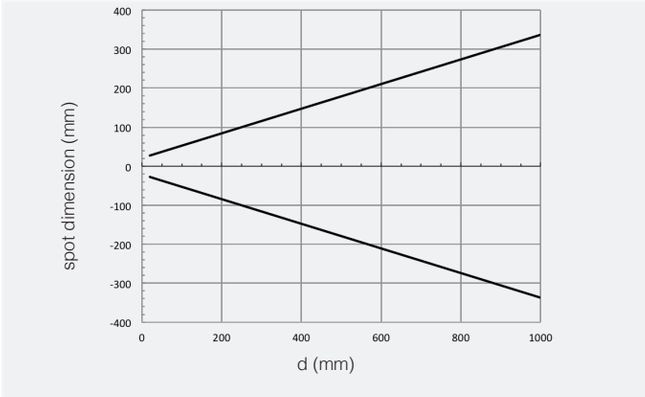

QMR8/**-* parallel displacement

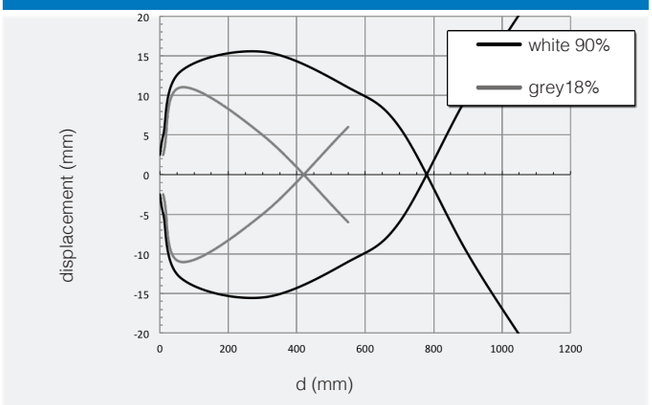

QMI7/**-* excess gain

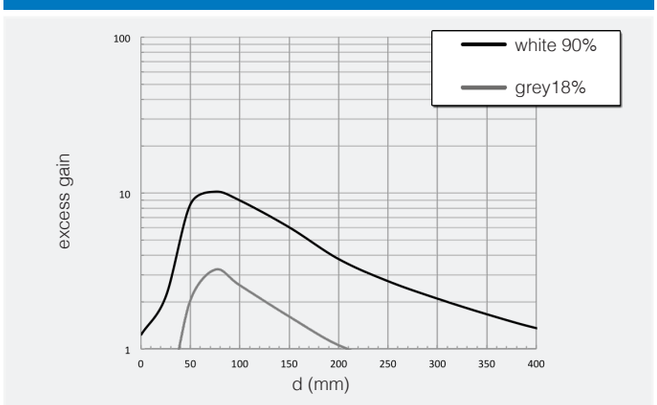

QMI7/**-* spot dimension

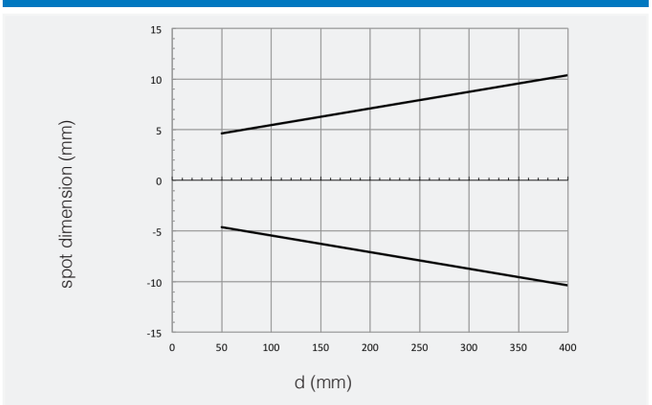

QMI7/**-* parallel displacement

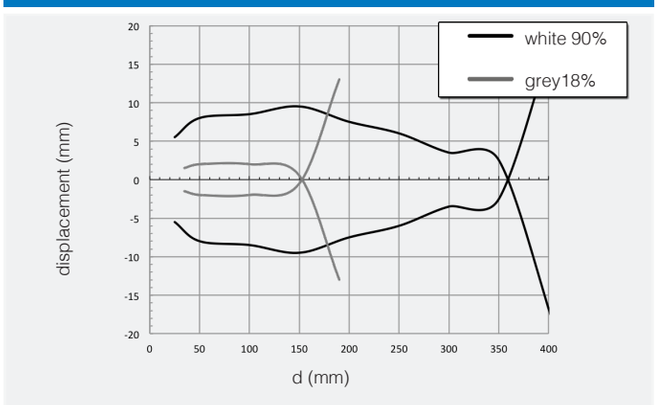

QMI9/**-* excess gain

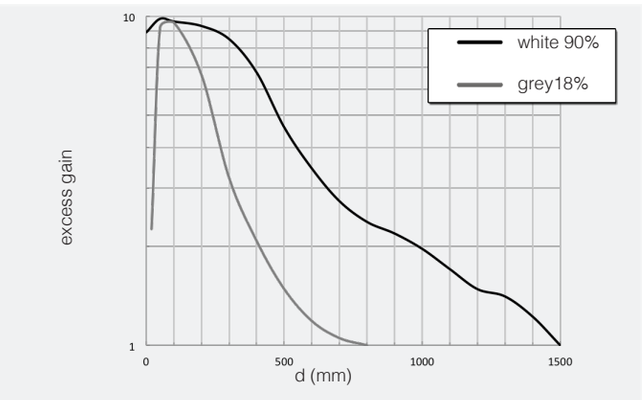

QMI9/**-* spot dimension

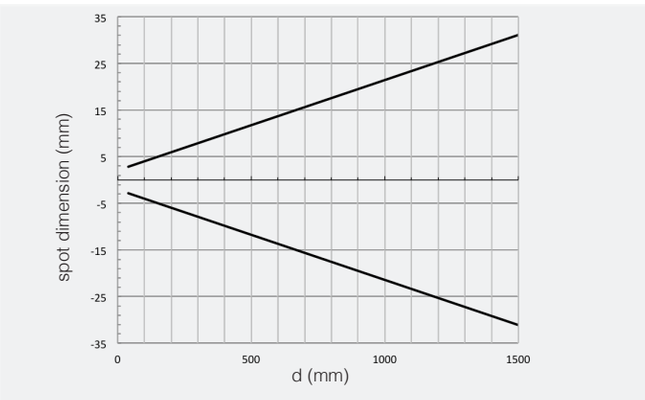

QMI9/**-* parallel displacement

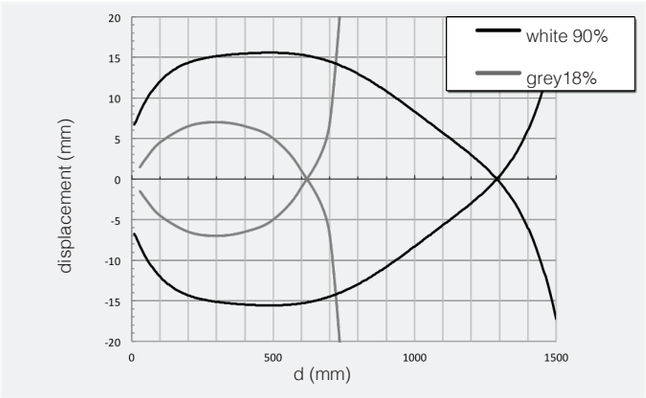

response diagrams

background suppression models

QMRS/**-* reduction of sensing distance

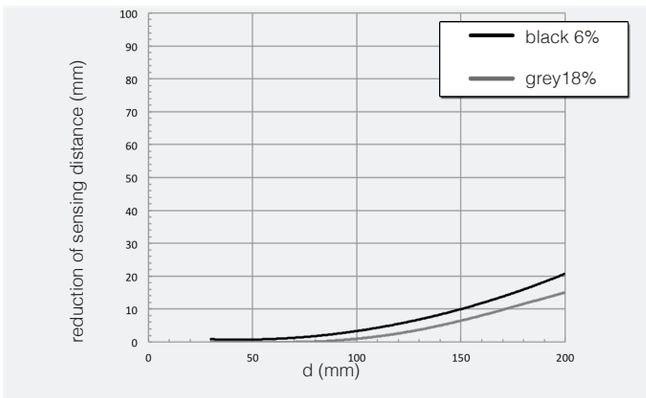

QMRS/**-* spot dimension

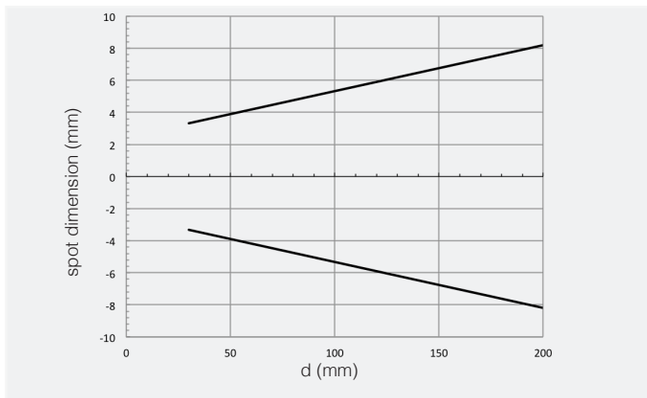

QMRS/**-* parallel displacement

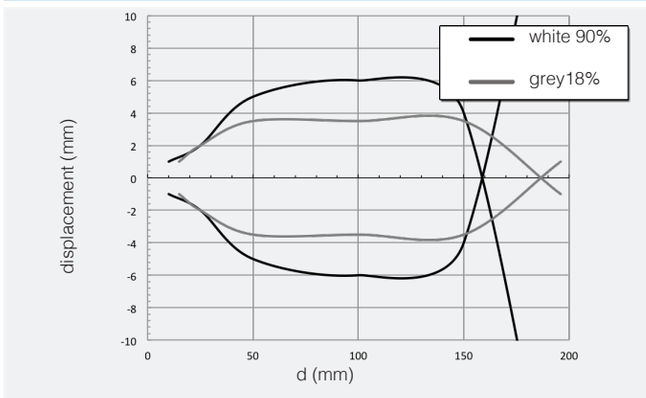

QMIS/**-* reduction of sensing distance

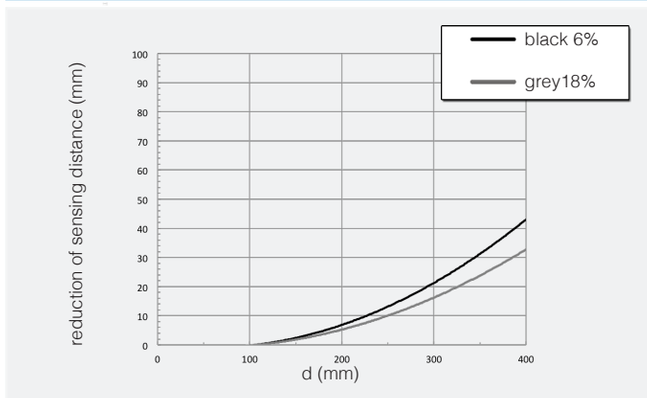

QMIS/**-* spot dimension

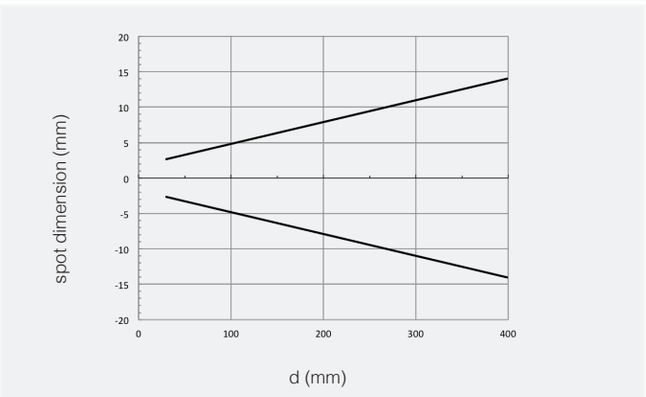

QMIS/**-* parallel displacement

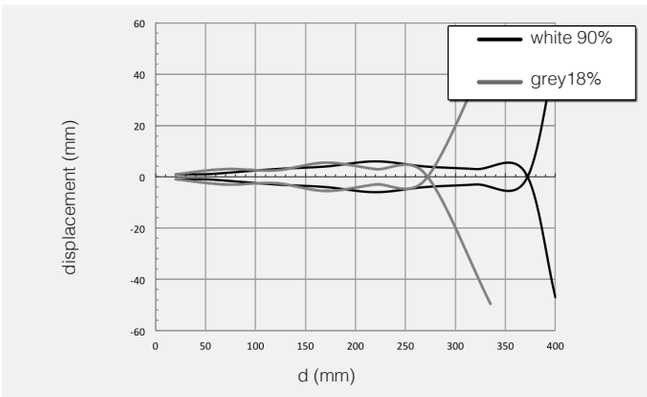

response diagramss

models for transparent objects

QMRG/**-* excess gain

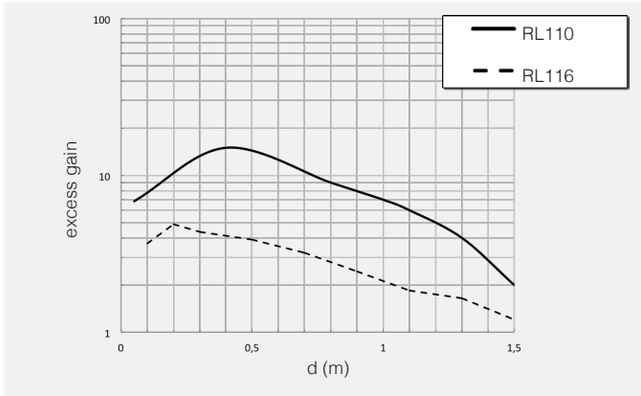

QMRG/**-* spot dimension

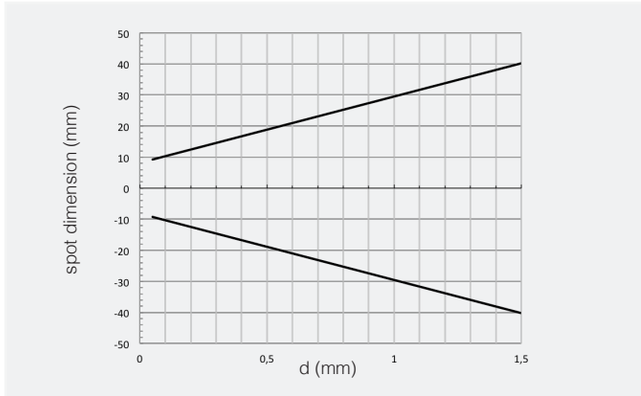

QMRG/**-*parallel displacement

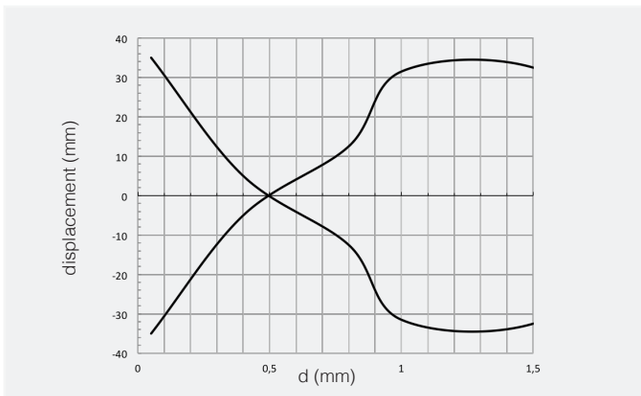

QMIG/**-* excess gain

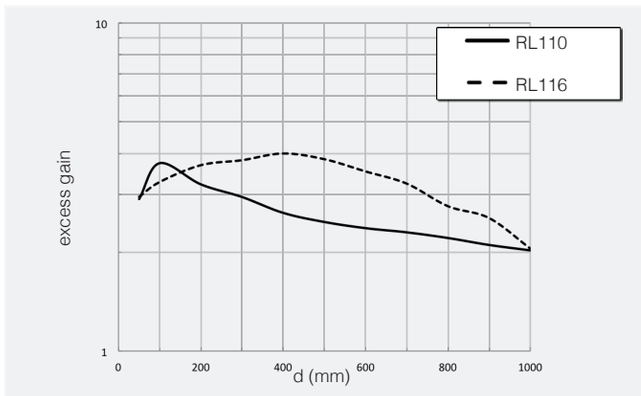

QMIG/**-* spot dimension

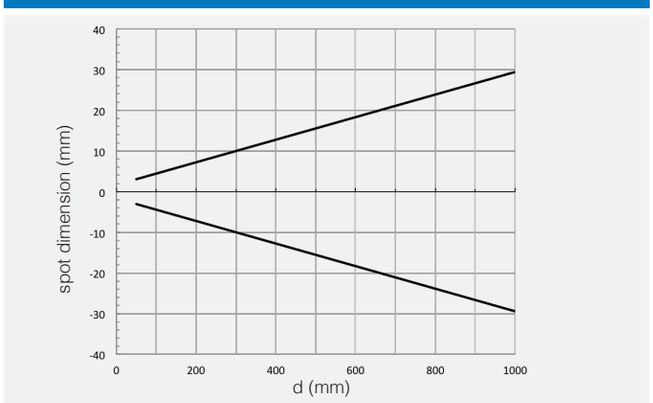

QMIG/**-*parallel displacement

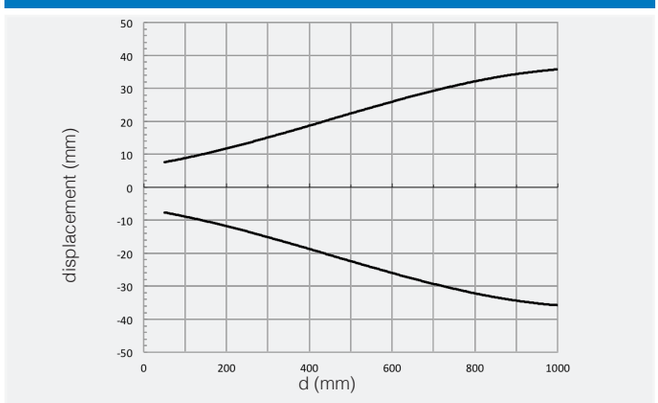

QMRL/**-* excess gain

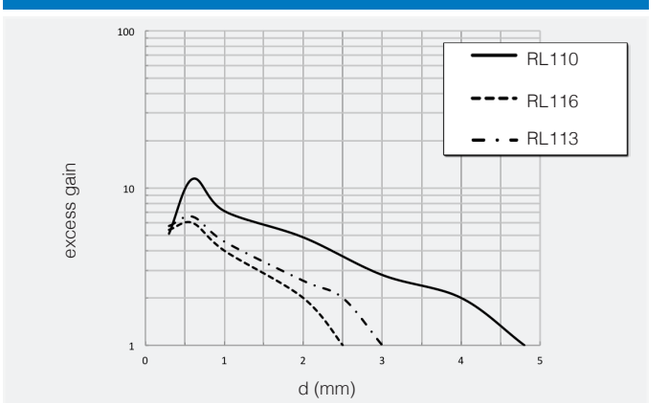

QMRL/**-* spot dimension

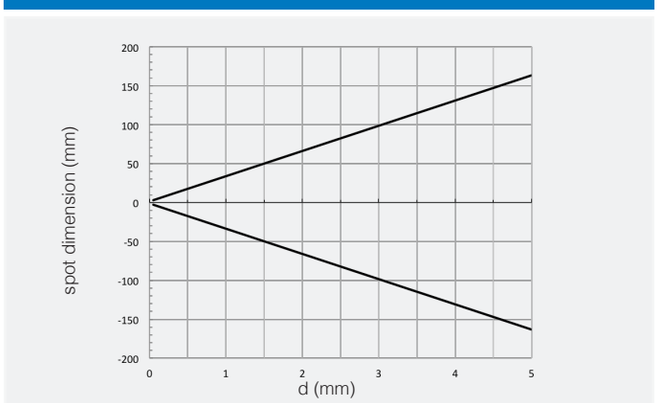

QMRL/**-*parallel displacement

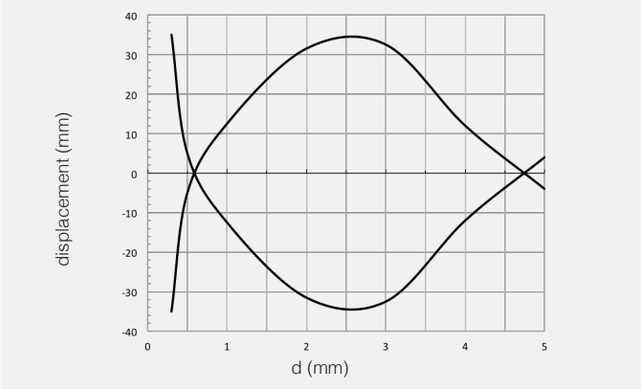

response diagramss

retroreflective polarized models

QMRN/**-* excess gain

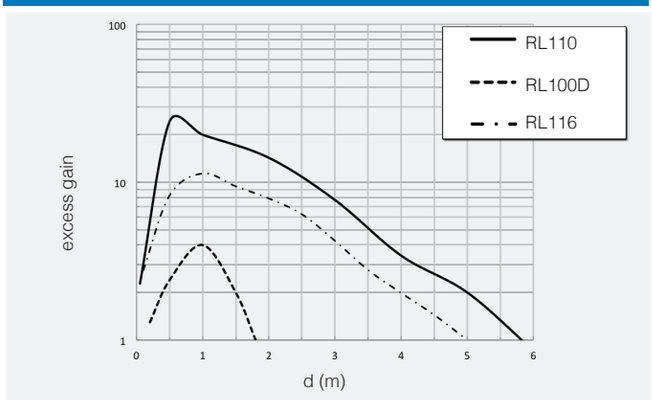

QMRN/**-* spot dimension

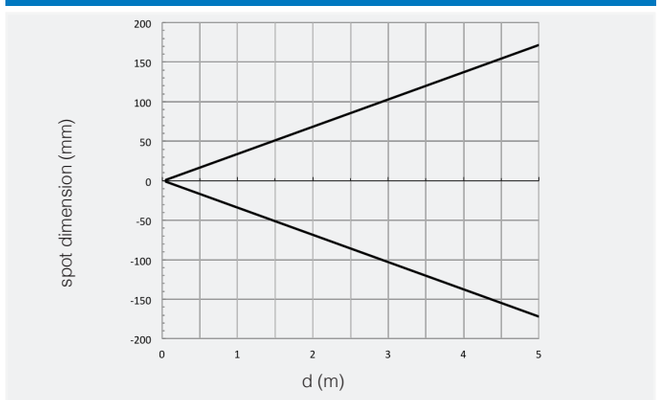

QMRN/**-*parallel displacement

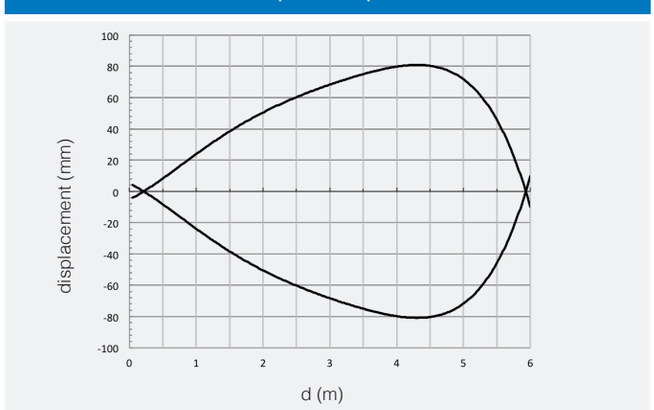

response diagramss

retro-reflective models

QMIC/-* excess gain**

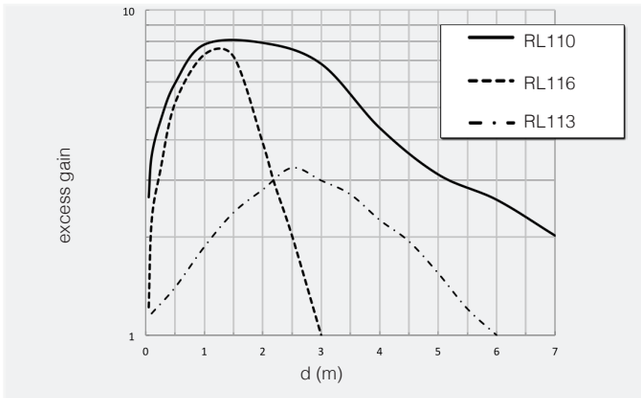

QMIC/-* spot dimension**

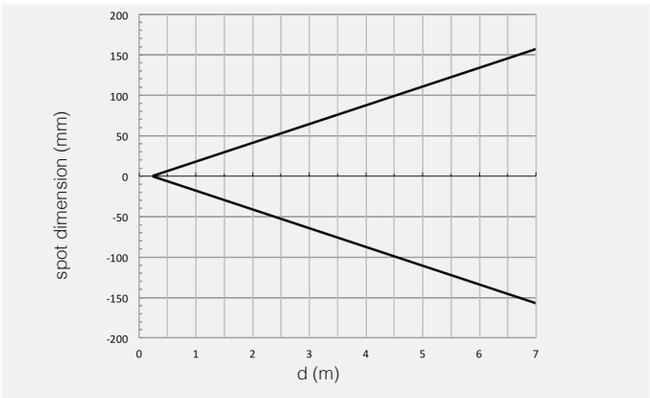

QMIC/-*parallel displacement**

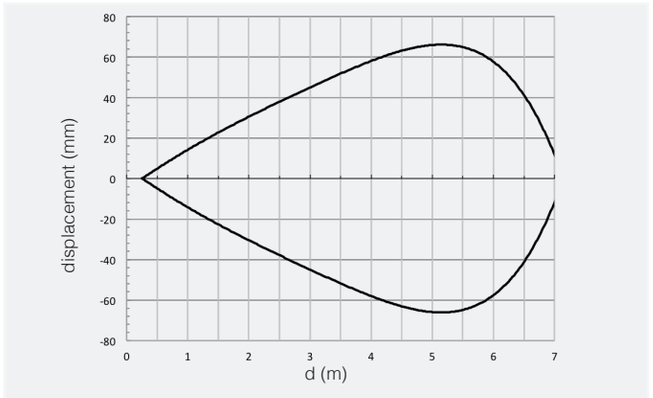

response diagramss

through beam models

QMRHD/-* excess gain**

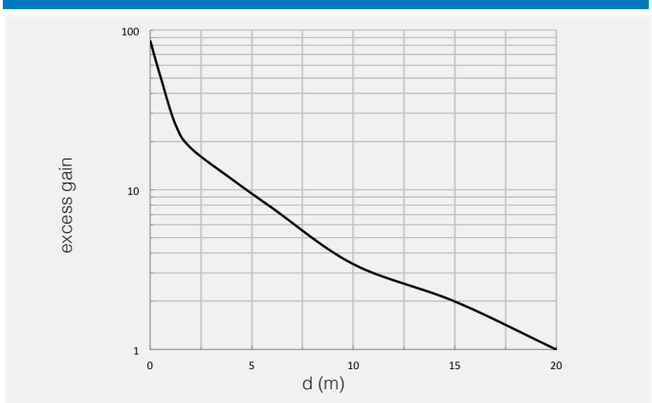

QMRHD/-* spot dimension**

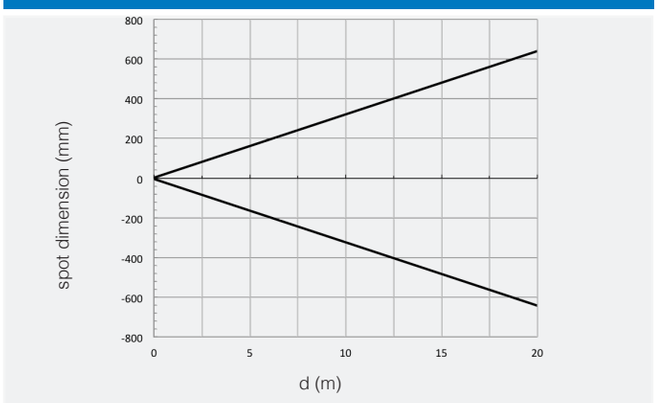

QMRHD/**-*parallel displacement

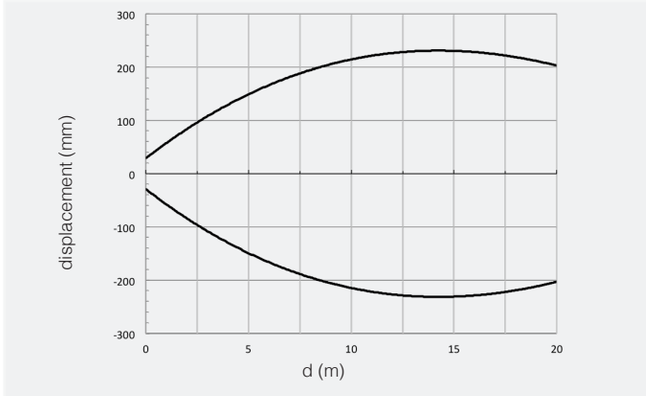

QMIHD/**-* excess gain

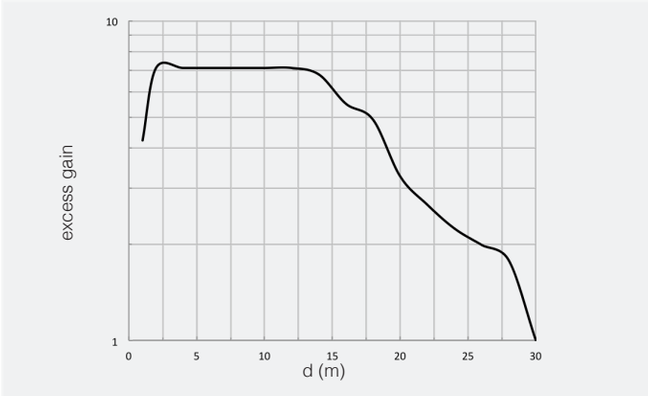

QMIHD/**-* spot dimension

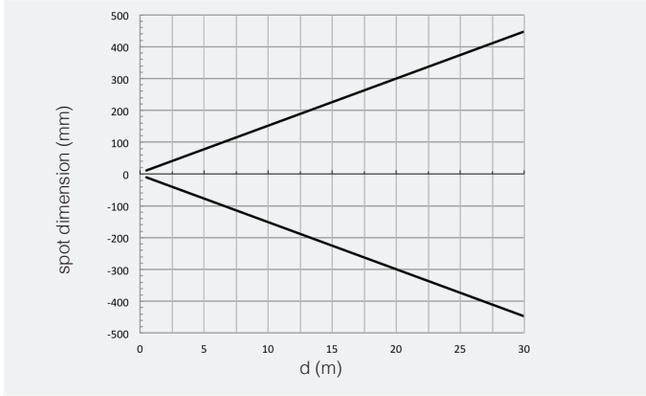

QMIHD/**-*parallel displacement

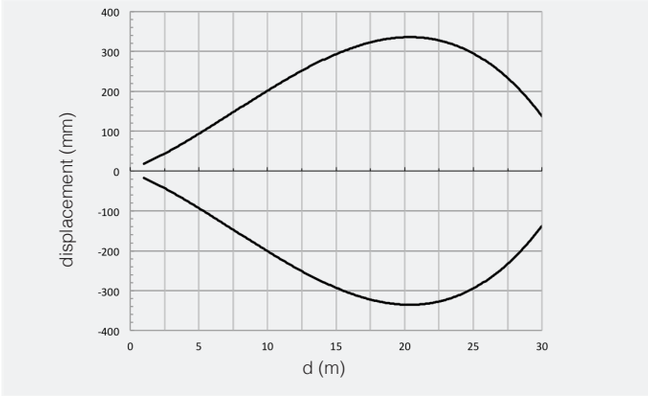

dimensions (mm)

QM**/**-0A

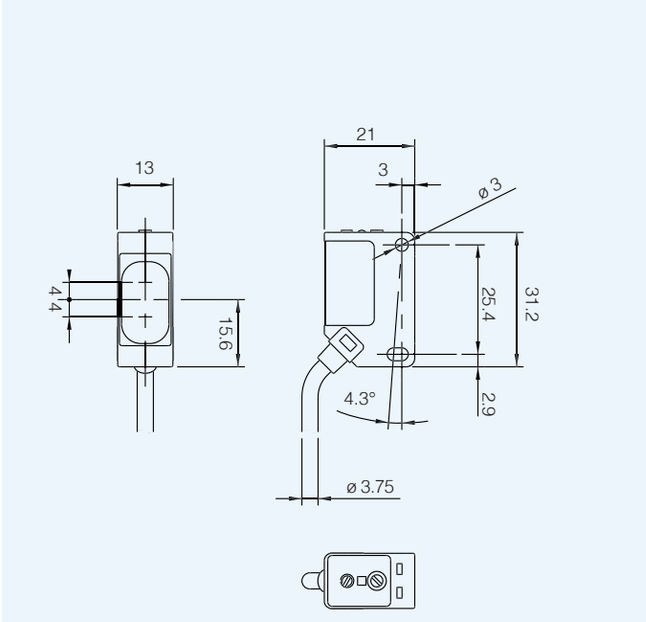

QM**/**-0E

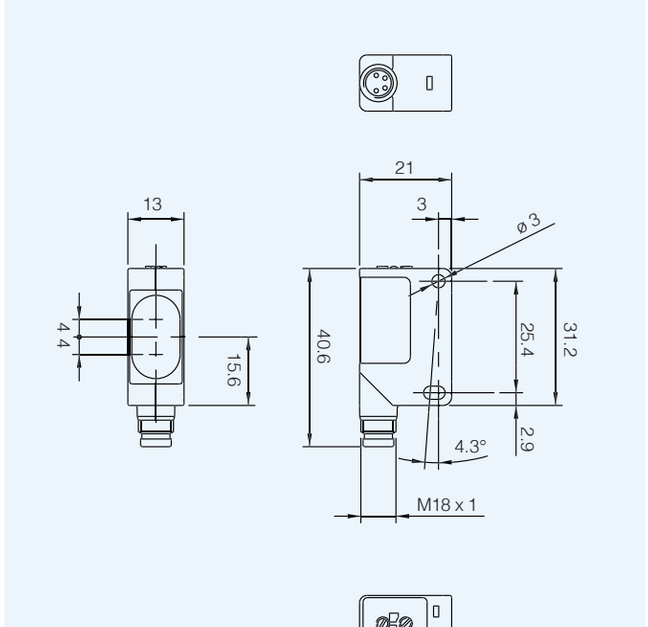

accessories

ST 101 / L vertical mounting bracket

product	to be used with	dimensions (mm)	description / installation
	QM Sensors	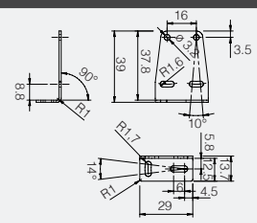	• ± 5° tip • ± 7° swivel • stainless steel

ST 102 / L side mounting bracket

product	to be used with	dimensions (mm)	description / installation
	QM Sensors	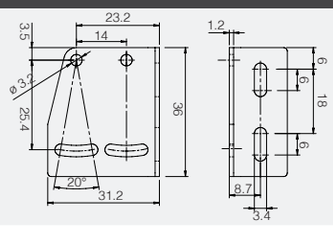	• ± 10° tip • stainless steel

ST 103 [1] / Vertical mounting bracket with protective cover

prodotto	to be used with	dimensions (mm)	description / installation
	QM Sensors	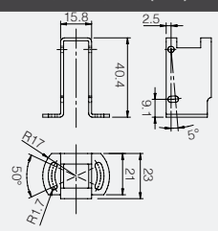	• ± 25° swivel • stainless steel

ST 104 [1] / Horizontal mounting bracket with protective cover

product	to be used with	dimensions (mm)	description / installation
	QM Sensors	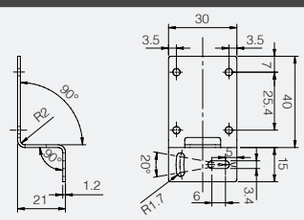	• ± 10° swivel • stainless steel

STQM0 / Vertical and horizontals shutters

prodotto	to be used with	dimensions (mm)	description / installation
	QM*HD Sensors	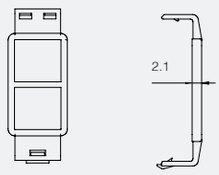	• Vertical and horizontal diaphrams (0.5 - 1.2) • Packing units 2

dia.	0.5	1	2
Sn (EG=1)	1.5 m	2 m	4.5 m
Sn (EG=2)	1 m	1,5 m	4 m
Min. Ø	0.8 mm	1.5 mm	2.5 mm

STQMS [2] / Screws - nuts - lockwashers

prodotto	to be used with	dimensions (mm)	description / installation
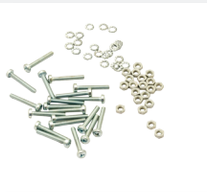	QM Sensors	w	• 20 Cross-slotted screw M3x20 • 20 Hexagon nuts M3 • 20 Lockwashers Ø3

[1] It can be used only for cable or pig-tail exit models [2] Components not present in standard sensors packaging

PS series

DC miniaturized cubic photoelectric sensors

features

- **Wide range of models: diffuse, retro-reflective, through-beam**
- **Extremely reduced dimensions**
- **High sensing distance**
- **Sensitivity adjustment**
- **Standard cable exit or M12 plug exit**
- **LED status indicator**
- **IP65 protection degree**
- **Complete protection againts electrical damage**

web content

- **Application notes**
- **Photos**
- **Catalogue / Manuals**

code description

PS 2 / A N - 0 C

series	PS	Miniaturized rectangular photoelectric sensor
type	2	100 mm diffuse reflection
	4	200 mm diffuse reflection
	C	3 m retro-reflective
	E	Emitter
	R	Receiver
NO / NC output	0	Emitter / NO/NC selectable output (PSR only)
	A	NO output state
	C	NC output state
NPN / PNP output	0	Emitter
	N	NPN output
	P	PNP output
housing	0	Plastic housing 2 m
cble / plug output	C	Right angle cable exit
	E	Right angle M12 plastic plug cable exit

WW

available models

model	distance	output	3 wires				4 wires	
			LO NPN	DO NPN	LO PNP	DO PNP	LO / DO NPN	LO / DO PNP
diffuse reflection	100 mm	cable	PS2/AN-0C	PS2/CN-0C	PS2/AP-0C	PS2/CP-0C	-	-
		plug	PS2/AN-0E	-	PS2/AP-0E	-	-	-
	200 mm	cable	PS4/AN-0C	-	PS4/AP-0C	-	-	-
		plug	PS4/AN-0E	-	PS4/AP-0E	-	-	-
retro-reflexive	2 m	cable	-	-	PSC/AP-0C	-	-	-
		plug	-	-	PSC/AP-0E	PSC/CP-0E	-	-
through-beam	4 m	cable	-	-	-	-	PSE/00-0C	
		plug	-	-	-	-	PSE/00-0E	
		cable	-	-	-	-	PSR/0N-0C	PSR/0P-0C
		plug	-	-	-	-	PSR/0N-0E	PSR/0P-0E

technical specification

	diffuse reflection		retro-reflective	through-beam
	PS2/**-0*	PS4/**-0*	PSC/**-0*	PSE/00-0* PSR/**-0*
				
nominal sensing distance	100 mm [1]	200 mm [1]	3 m [2]	4 m
emission	infrared (880 nm)			
tolerance	+ 15 / - 5 % Sn			-
hysteresis	≤ 5 %		≤ 10 %	
operating voltage	10...30 Vdc max			
ripple	≤ 10 %			
no-load supply current	30 mA max			25 mA (emitter) 30 mA (receiver)
load current	≤ 100 mA			
leakage current	≤ 10 µA @ Vmax			
output voltage drop	1.2 Vmax			
output type	PNP or NPN , NO or NC (NO/NC selectable for PSR models)			
switching frequency	100 Hz			25 Hz
power on delay	200 ms			
temperature range	- 25°C...+ 70°C (without freeze)			
power supply protections	polarity reversal, transient			
supply electrical output	short circuit (autoreset)			
sensitivity adjustment	1 turn trimmer			
temperature range	≤ 10 % Sr			
protection degree	IP65 (EN60529) [3]			
EMC	in conformity with the EMC Directive according to EN 60947-5-2			
external light interference	3,000 lux (incandescent lamp), 10,000 lux (sunlight)			
LEDs	red (output energized)			
housing material	ABS			
optic material	PMMA			
weight (approximate)	70 g connector / 140 g cable (20 g mounting bracket ST07)			

[1] With 100x100 mm white matt paper [2] With standard reflector Ø80 mm (RL110 supplied seperately) [3] Protection guaranteed only with plug cable well mounted

electrical diagrams of the connections

PSE/00-0* emitter	PSR/*N-0* NPN output	PSR/*P-0* PNP output

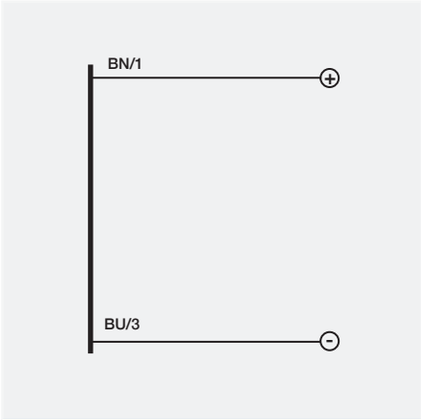

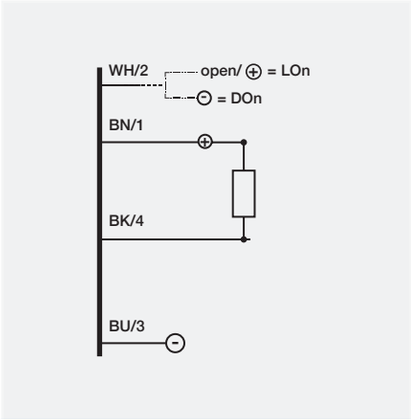

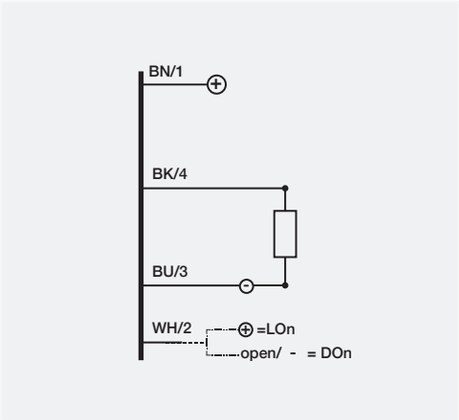

PS*/*N-0* NPN output	PS*/*P-0* PNP output

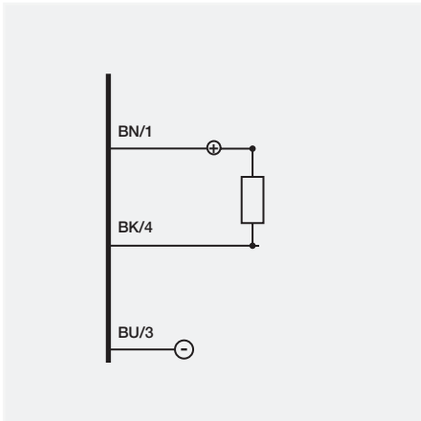

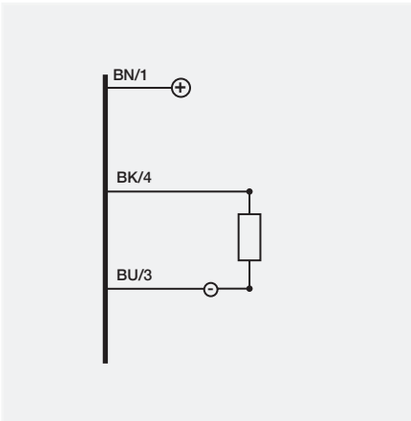

BN	brown
BU	blue
BK	black
WH	white
PK	pink
GY	gray

Notes:

In case of combined load, resistive and capacitive, the maximum admissible capacity C = 0,1 µF, for maximum output volt-age and current.

Wh (white wire): the cable present on the receiver PSR/0*- 0* allows the output state selection.

NPN output: NO state (white and brown on +), NC state (white and blue on -).

PNP output: NO state (white and blue on -), NC state (white and brown on +).

plug

M12 PSR/00-0*	M12 PS*/**-0*	M12 PS2/**-1

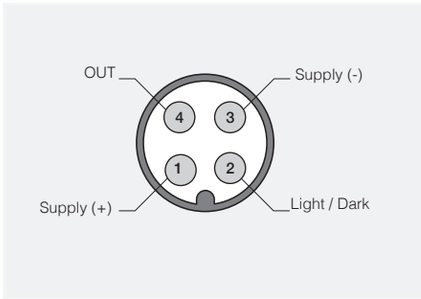

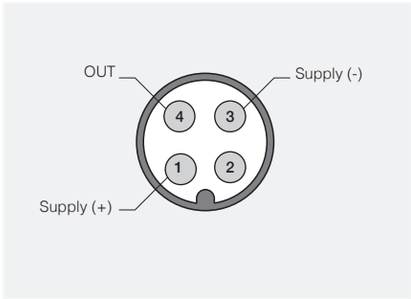

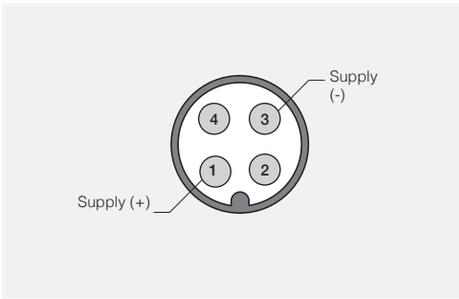

response diagrams

direct reflection models

PS2/**-** excess gain

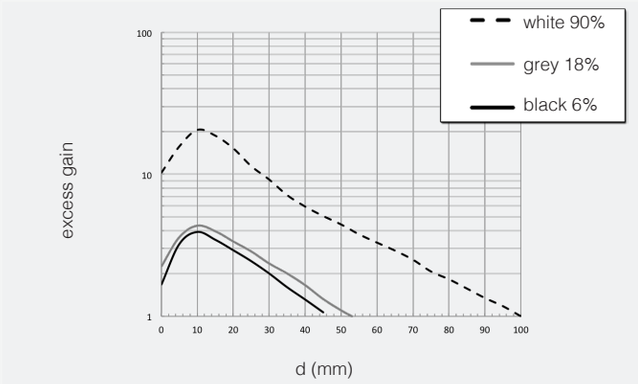

PS2/**-** spot dimension

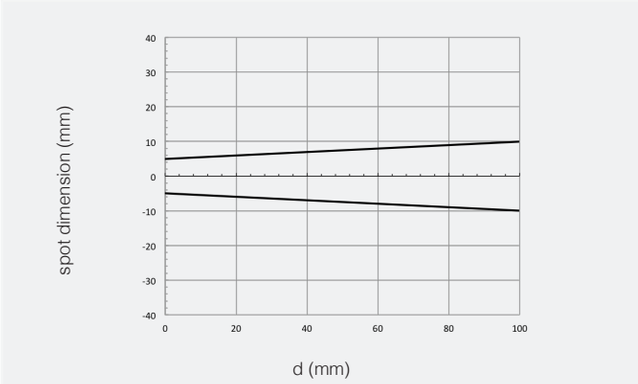

PS2/**-** parallel displacement

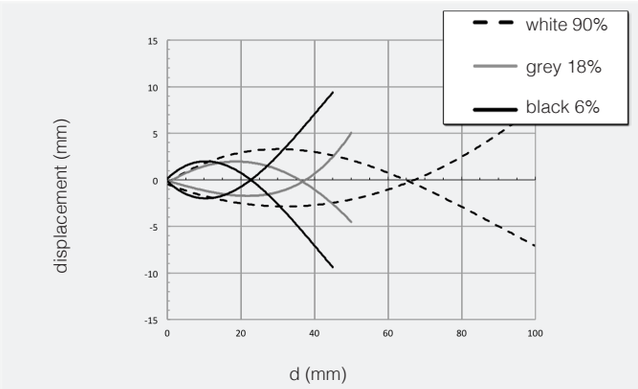

PS4/**-** excess gain

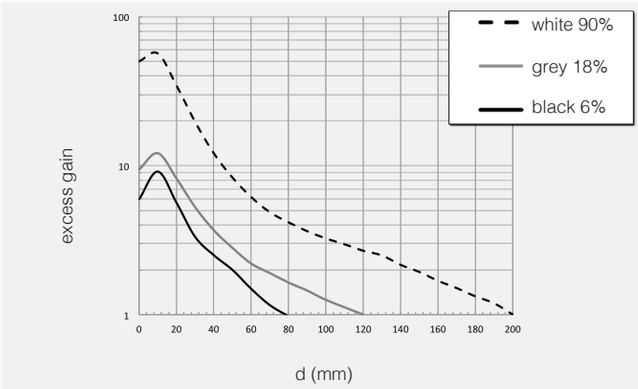

PS4/**-** spot dimension

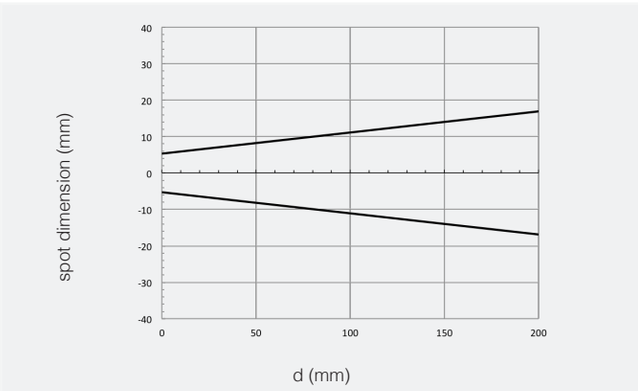

PS4/**-** parallel displacement

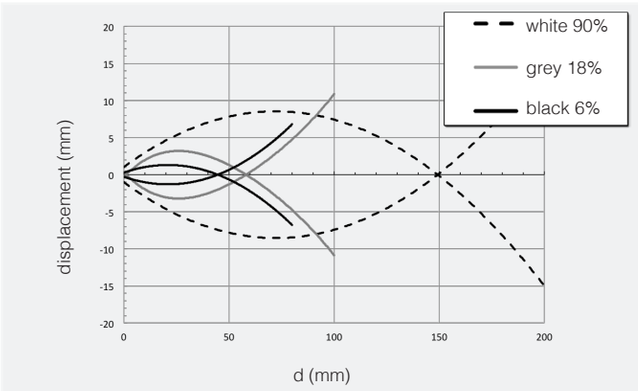

response diagrams

retro-reflective models (detected with RL 110)

PS2/-** excess gain**

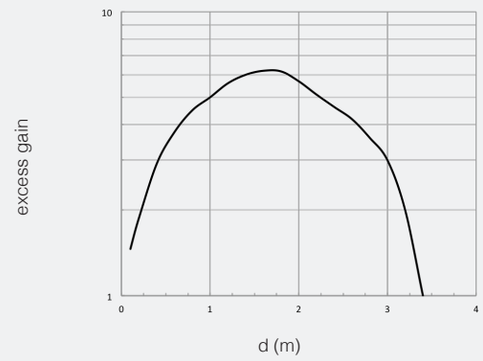

PS2/-** spot dimension**

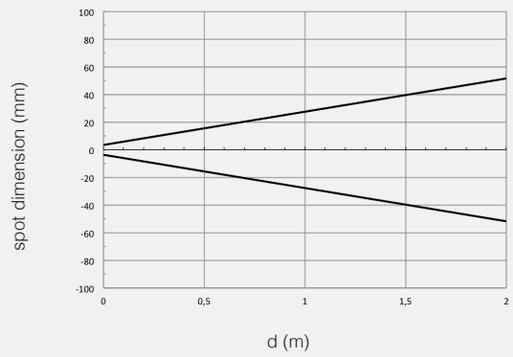

PS2/-** parallel displacement**

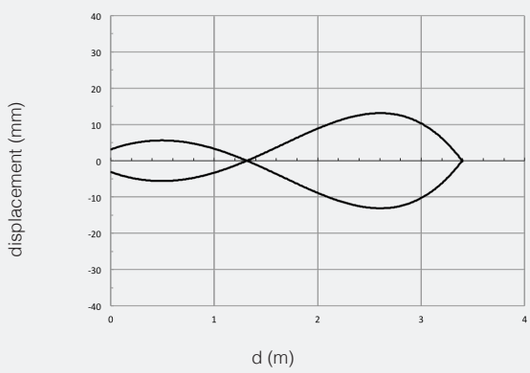

response diagrams

through beam models

PSE/00-0* - PSR/00-0* excess gain

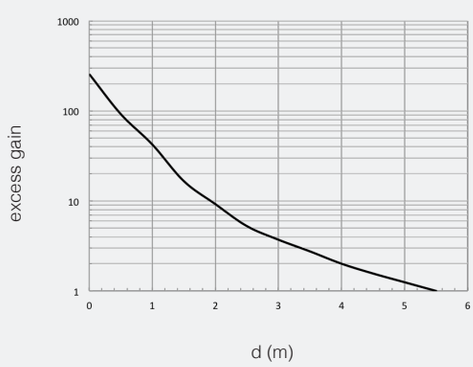

PSE/00-0* - PSR/00-0* spot dimension

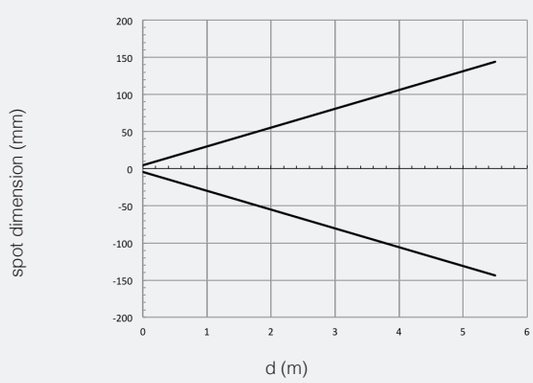

PSE/00-0* - PSR/00-0* parallel displacement

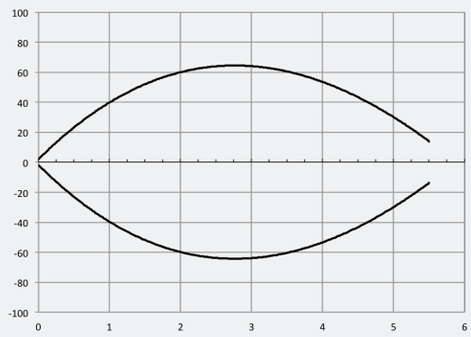

dimensions (mm)

PS2/**-0C - PS4/**-0C

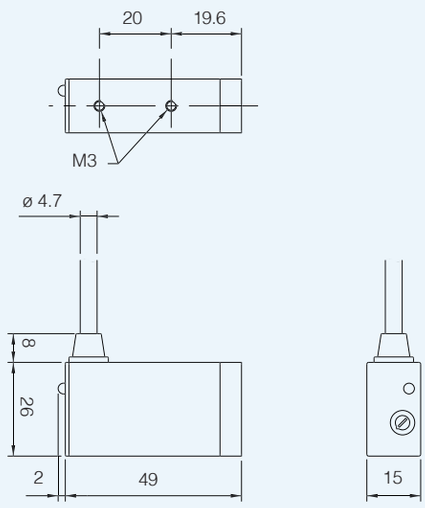

PSC/**-0C - PSE/00-0C - PSR/0*-0C

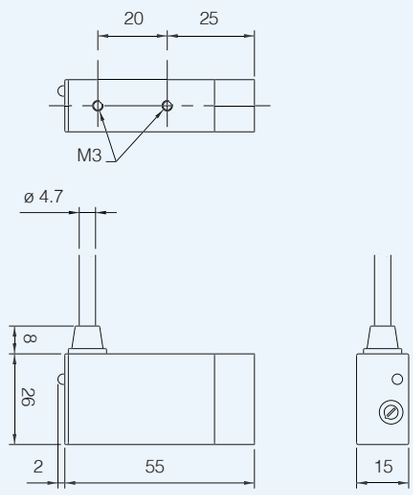

PS*/**-0E

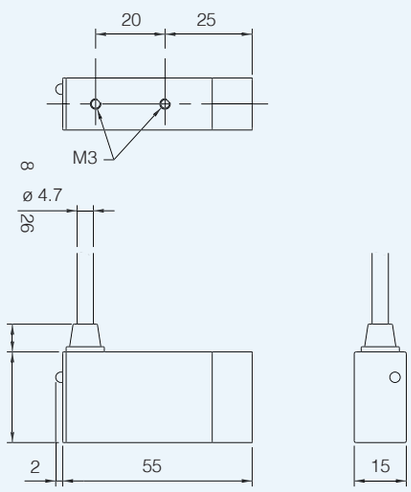

QX series

DC miniaturized cubic photoelectric sensors

features

- **Axial and right angle optics**
- **2 LEDs (threshold and signal margin)**
- **Visible red light in retro-reflective, polarized and through-beam models**
- **Long distances capability**
- **Precision beam**
- **Fast response time (0,75-0,5 ms)**
- **NPN-PNP selectable output**
- **High output current (>300 mA)**

web content

- **Application notes**
- **Photos**
- **Catalogue / Manuals**

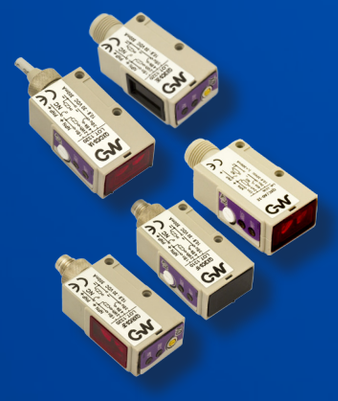

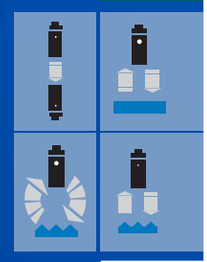

DC miniaturized cubic

code description

QX 3 / A 0 - 1 A

series	QX	Miniaturized photoelectric sensor
type	3	Diffuse reflection 300 mm
	C	Retro-reflective 5 m
	P	Polarized 3 m
	X	Emitter with check
	R	Receiver 8 m
output	A	NO output state
	C	NC output state
	0	Emitter
axial / radial optics	1	Axial optics
	2	Right angle optics
cable / plug output	A	Cable exit 2 m
	F	M8 plug cable exit
	E	M12 plug cable exit

available models

axial optic

model		distance	cable		plug M8		plug M12	
			NO	NC	NO	NC	NO	NC
direct diffuse		300 mm	QX3/A0-1A	QX3/C0-1A	QX3/A0-1F	QX3/C0-1F	QX3/A0-1E	QX3/C0-1E
retro-reflective		5 m	QXC/A0-1A	QXC/C0-1A	QXC/A0-1F	QXC/C0-1F	QXC/A0-1E	QXC/C0-1E
polarized		3 m	QXP/A0-1A	QXC/C0-1A	QXP/A0-1F	QXP/C0-1F	QXP/A0-1E	QXP/C0-1E
through-beam	emitter	8 m	QXX/00-1A		QXX/00-1F		QXX/00-1E	
	receiver		QXR/A0-1A	QXR/C0-1A	QXR/A0-1F	QXR/C0-1F	QXR/A0-1E	QXR/C0-1E

available models

radial optic

model		distance	cable		plug M8		plug M12	
			NO	NC	NO	NC	NO	NC
direct diffuse		300 mm	QX3/A0-2A	QX3/C0-2A	QX3/A0-2F	QX3/C0-2F	QX3/A0-2E	QX3/C0-2E
retro-reflective		5 m	QXC/A0-2A	QXC/C0-2A	QXC/A0-2F	QXC/C0-2F	QXC/A0-2E	QXC/C0-2E
polarized		3 m	QXP/A0-2A	QXC/C0-2A	QXP/A0-2F	QXP/C0-2F	QXP/A0-2E	QXP/C0-2E
through-beam	emitter	8 m	QXX/00-2A		QXX/00-2F		QXX/00-2E	
	receiver		QXR/A0-2A	QXR/C0-2A	QXR/A0-2F	QXR/C0-2F	QXR/A0-2E	QXR/C0-2E

technical specification

	diffuse reflection	retro-reflective	polarized	through-beam
	QX3/*0-**	QXC/*0-**	QXP/*0-**	QXX/*0-** QXR/*0-**
		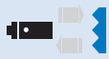		
nominal sensing distance	300 mm [1]	5 m [2]	3 m [2]	8 m
emission	infrared (880 nm)	red (660 nm)		
minimum detectable object	see characteristic curves			2 mm
tolerance	+ 15 % / - 5 % Sn			-
hysteresis	10 %			
repeatability	5 %			
operating voltage	10,8...30 Vdc			
ripple	10 % max			
load current	20 mA max			20 mA (emitter) 5 mA (receiver)
check voltage	-			10,8...30 Vdc (QXX)
load current	300 mA			
leakage current	100 µA max at 30 Vdc			
output voltage drop	1,2 V max IL = 100 mA			
output type	PNP or NPN selectable			
switching frequency	750 Hz (Tr = 0,5 ms)			500 Hz (Tr = 0,75 ms)
power on delay	200 ms			
operating temperature range	- 25°C...+ 70°C (without freeze)			
power supply protections	polarity reversal, transient			
output protection	short circuit (autoreset)			
protection degree	IP67 (EN60529) [3]			
EMC	in conformity with the EMC Directive according to EN 60947-5-2			
external light interference	3,000 lux (incandescent lamp), 10,000 lux (sunlight)			
LEDs	RED LED (margin low signal) CHECK (QXX) GREEN LED (stability) POWER (QXX)			
housing material	ABS (glass fiber reinforced)			
optic material	acrylic			
weight (approximate)	30 g connector / 70 g cable (single)			

[1] With 100x100 mm white matt paper [2] With standard reflector Ø80 mm (RL110 supplied seperately) [3] Protection guaranteed only with plug cable well mounted

electrical diagrams of the connections

emitter with check

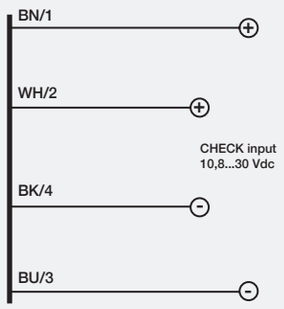

NPN output

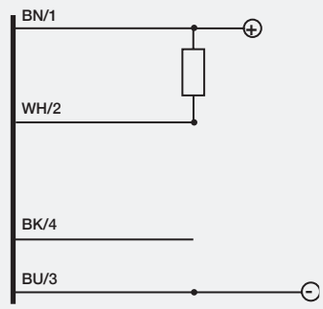

PNP output

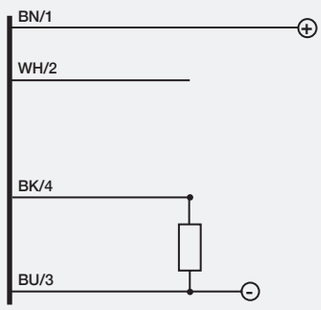

BN	brown
BU	blue
BK	black
WH	white

plug

M8

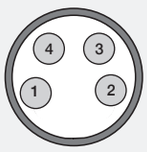

M12

response diagrams

direct reflection models

QX3/*0- excess gain**

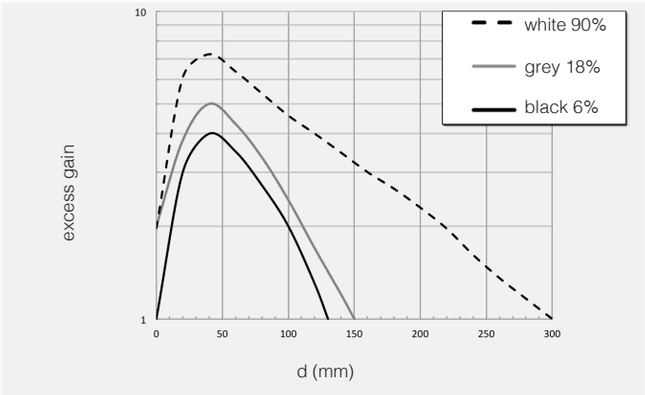

QX3/*0- spot dimension**

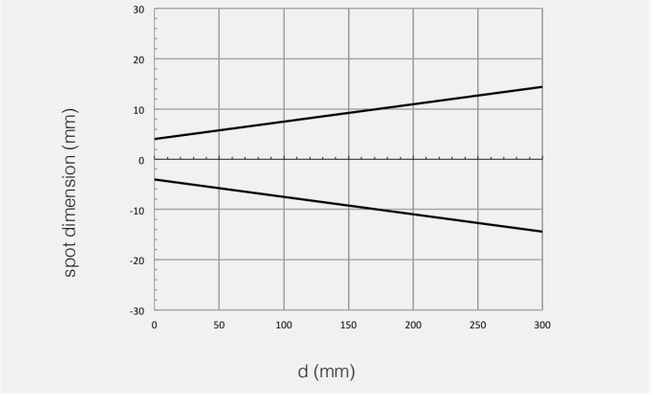

QX3/*0- parallel displacement**

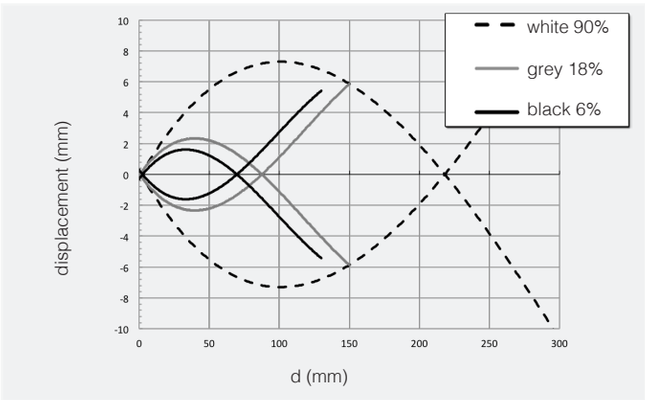

response diagrams

retroreflective models

QXC/*0- excess gain**

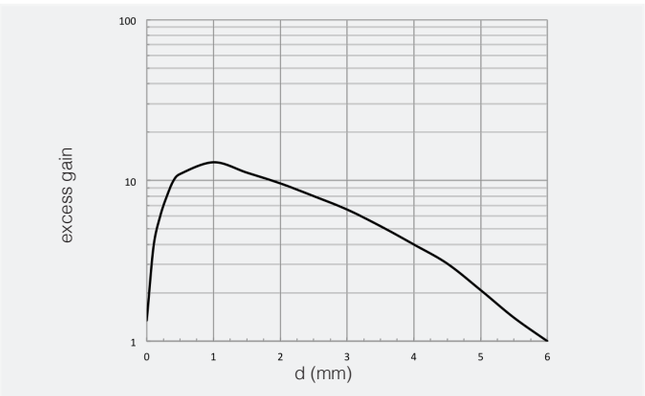

QXC/*0- spot dimension**

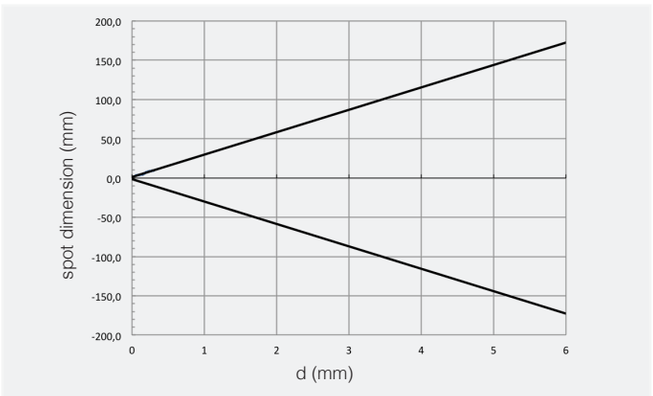

QXC/*0-** parallel displacement

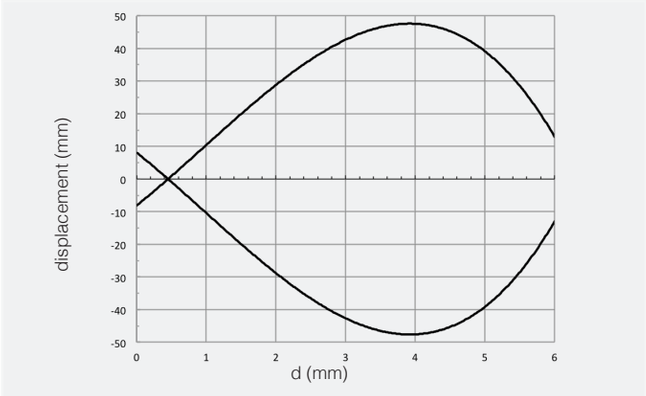

response diagrams

polarized models

QXP/*0-** excess gain

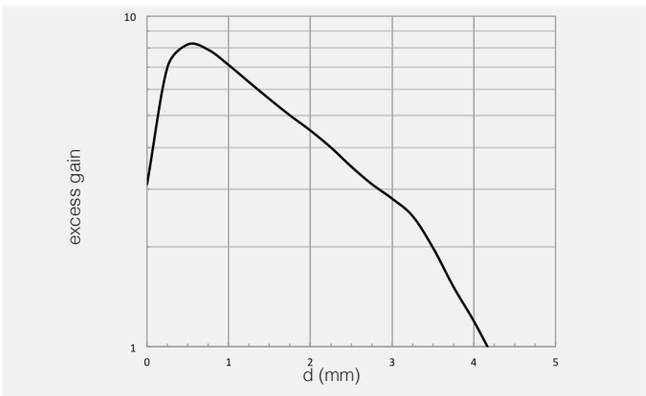

QXP/*0-** spot dimension

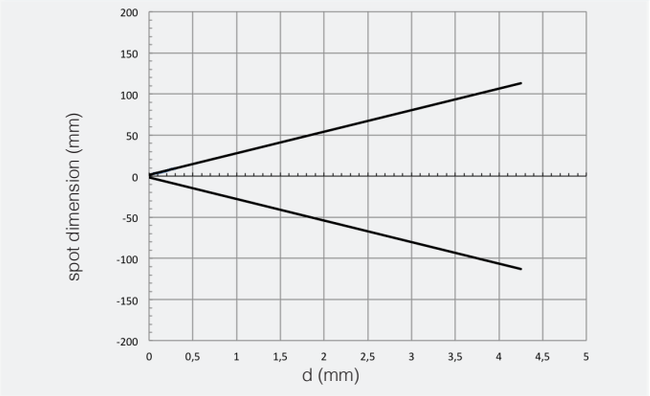

QXP/*0-** parallel displacement

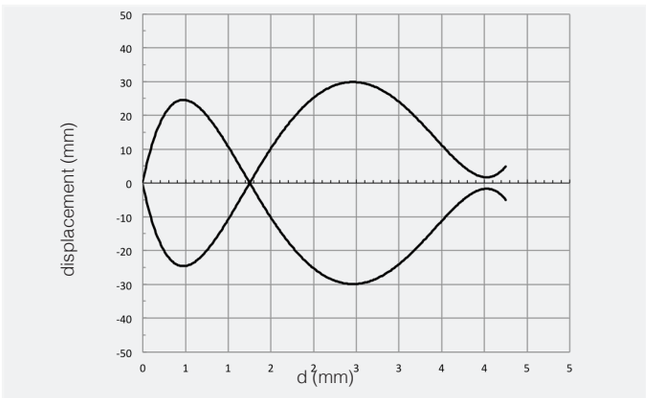

response diagrams

a barriera

QXX/00-** - QXR/*0-** excess gain

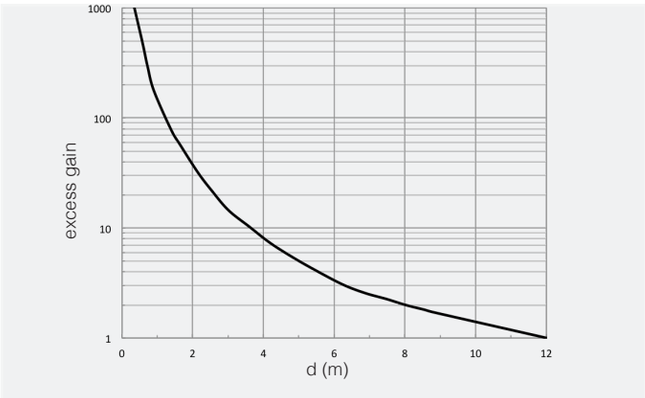

QXX/00-** - QXR/*0-** spot dimension

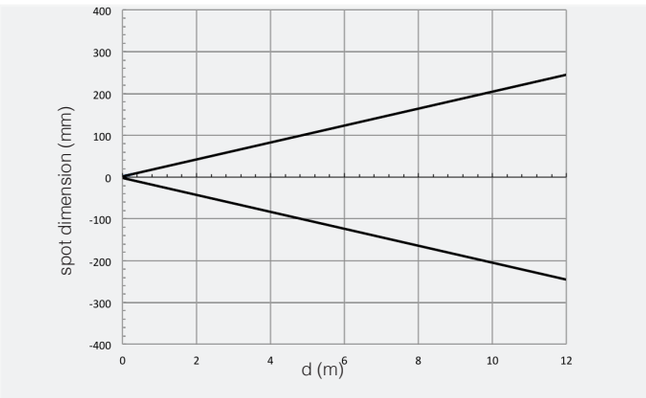

QXX/00-** - QXR/*0-** parallel displacement

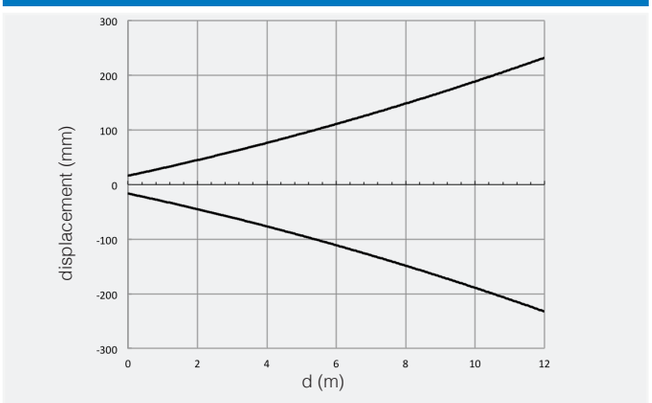

dimensions (mm)

QX*/**-1A

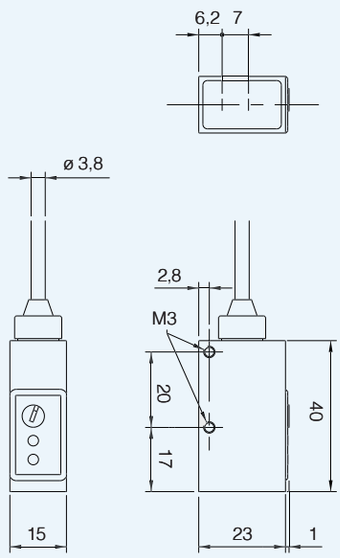

QX*/**-1E

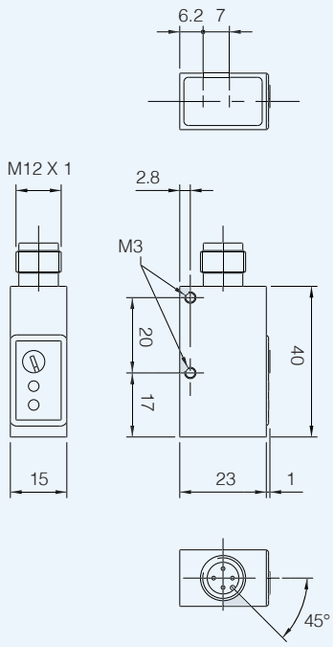

QX*/**-1F

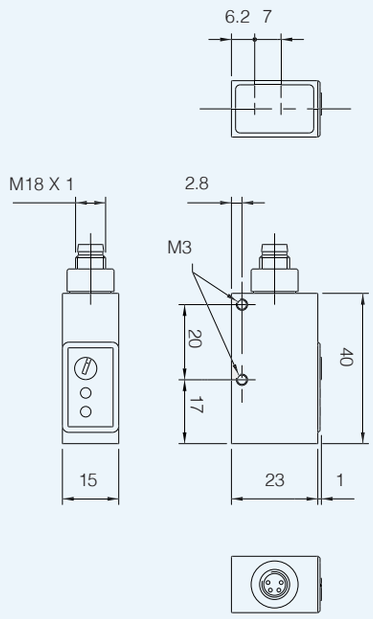

QX*/**-2A

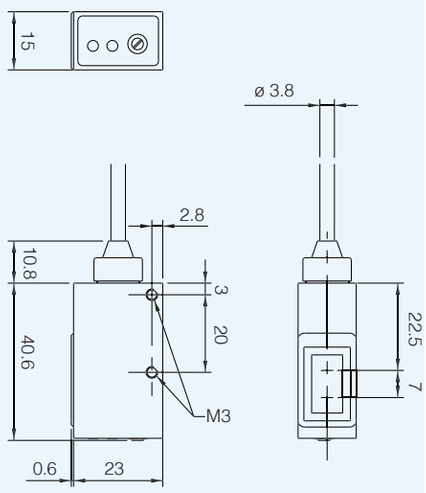

QX*/**-2E

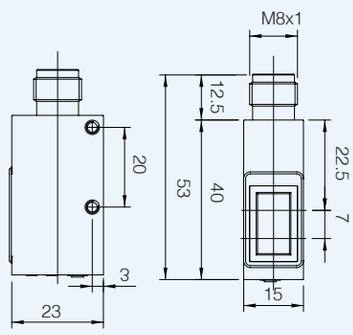

QX*/**-2F

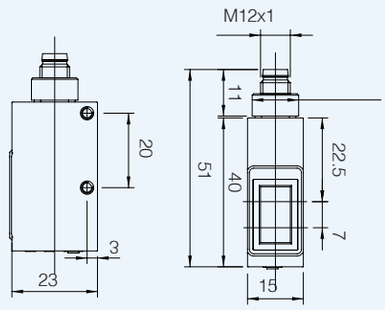

notes

BS - BV series

Cubic photoelectric sensors
DECOUT® output - DC or AC

features

- **Wide range of models: diffuse, retro-reflective, polarized**
- **Muntifunctional DECOUT® output and logic connection possibilities (DC types)**
- **Multivoltage 20-253 Vac and T_{RIAC} output with NO/NC selectable (AC types)**
- **Sensitivity adjustment**
- **Standard cable exit or M12 plug exit**
- **LED status indicator**
- **Completely filled with resin**
- **High sensing range**

web content

- **Application notes**
- **Photos**
- **Catalogue / Manuals**

code description

BS 2 / 0 0 - 0 C

series	BS	DC - rectangular photoelectric sensor
	BV	AC - rectangular multivoltage photoelectric sensor
type	2	100 mm diffuse reflection
	4	200 mm diffuse reflection
	6	400 mm diffuse reflection
	8	1600 mm diffuse reflection
	C	8 m retro-reflective
NO / NC	0	NO / NC selectable output
NPN / PNP	0	NPN / PNP selectable output DC Triac output AC
housing	0	Plastic housing
cable / plug output	C	Right angle cable exit
	E	Right angle M12 plastic plug cable exit

available models

model	distance	output	DC - DECOUT®	AC - TRIAC
diffuse reflection	100 mm	cable	BS2/00-0C	BV2/00-0C
		M12	BS2/00-0E	BV2/00-0E
	200 mm	cable	BS4/00-0C	BV4/00-0C
		M12	BS4/00-0E	BV4/00-0E
	400 mm	cable	BS6/00-0C	BV6/00-0C
		M12	BS6/00-0E	BV6/00-0E
	1.600 m	cable	BS8/00-0C	-
		M12	BS8/00-0E	-
retroreflective	8 m	cable	BSC/00-0C	BVC/00-0C
		M12	BSC/00-0E	BVC/00-0E

technical specification

	diffuse reflection				retrorefl.	diffuse reflection			retrorefl.
	BS2/00-0*	BS4/00-0*	BS6/00-0*	BS8/00-0*	BSC/00-0*	BV2/00-0*	BV4/00-0*	BV6/00-0*	BVC/00-0*
nominal sensing distance	100 mm (1)	200 mm (1)	400 mm (2)	1.600 mm (2)	8 m (3)	100 mm (1)	200 mm (1)	400 mm (2)	8 m (3)
emission	infrared (880 nm)								
tolerance	+ 15 / - 5 % Sn								
corsa differenziale	5 %				10 %	5 %			10 %
repeatability	5 %								
operating voltage	10...30 Vdc					20...253 Vac / 50...60 Hz			
ripple	10 % max					-			
no-load supply current	25 mA					1,5 W			
load current	100 mA					5 mA / 300 m ARMS			
inrush current	-					6 A (ton = 10 ms)			
leakage current	≤ 10 µA					1,5 m ARMS max (supply V = 253 Vac)			
output voltage drop	1,2 Vmax					2,5 Vmax			
output type	DECOUT® (PNP, NPN, N0, NC selectable)					TRIAC (N0, NC selectable)			
switching frequency	80 Hz					25 Hz			
power on delay	200 ms								
temperature range	- 25°C...+ 70°C (without freeze)								
power supply protections	transient								
supply electrical output	short circuit (autoreset)					-			
temperature drift	≥ 10 % Sr								
protection degree	IP65 (EN60529) (4)								
EMC	in conformity with the EMC Directive according to EN 60947-5-2								
external light interference	3,000 lux (incandescent lamp), 10,000 lux (sunlight)								
LEDs	red (output energized)								
housing material	ABS polyetilene (cable exit)								
optic material	PMMA								
weight (approximate)	185 g (50 g mounting bracket ST01)								

(1) With 100x100 mm white matt paper (2) With 200x200 mm white matt paper (3) With standard reflector Ø80 mm (RL110 supplied seperately) (4) Protection guaranteed only with plug cable well mounted

electrical diagrams of the connections

BS*/00-0* DECOUT exit ® [1]

emitter with check

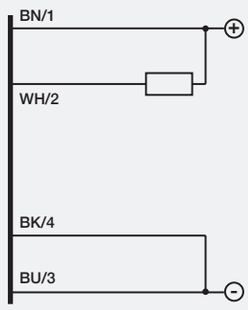

NPN output

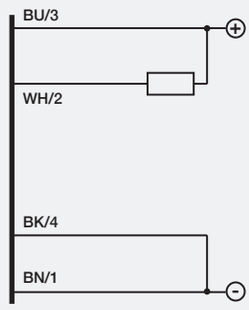

PNP output

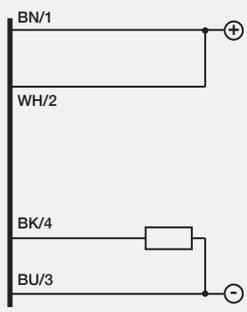

NPN output

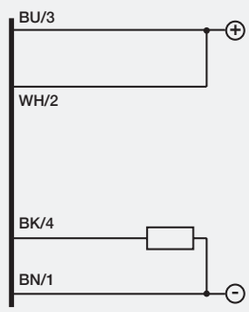

BN	brown
BU	blue
BK	black
WH	white

electrical diagrams of the connections

BV*/00-0* T_{RIAC} exit [2]

NO output

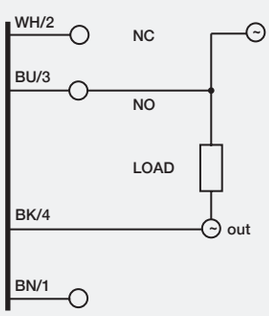

NCoutput

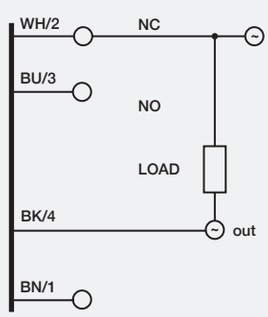

BN	brown
BU	blue
BK	black
WH	white

Notes:

[1] In case of combined load, resistive and capacitive, the maximum admissible capacity C = 0,2 µF, for maximum output voltage and current.

[2] Through proper wiring for the connection cable BV models in AC permit one to select the output state.

Output state NO:
BLUE = power supply
WHITE = disconnected (isolate on a terminal)

Output state NC:
WHITE = power supply
BLUE = disconnected (isolate on a terminal)

plug

M12

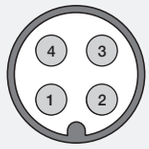

response diagrams

direct diffuse models

B*2/00- excess gain**

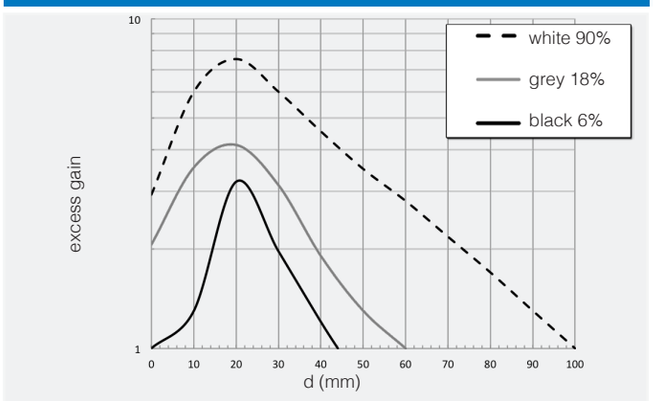

B*2/00- spot dimension**

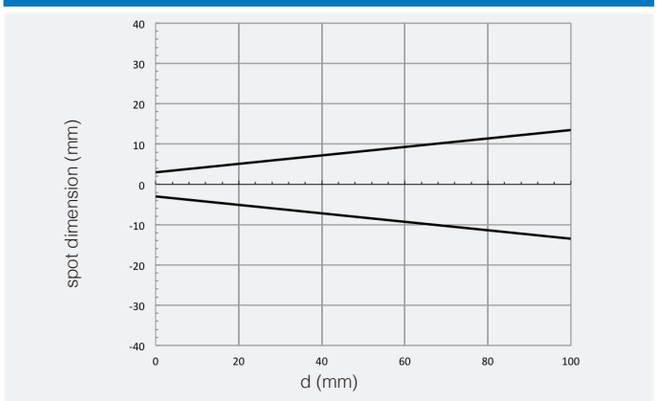

B*2/00- parallel displacement**

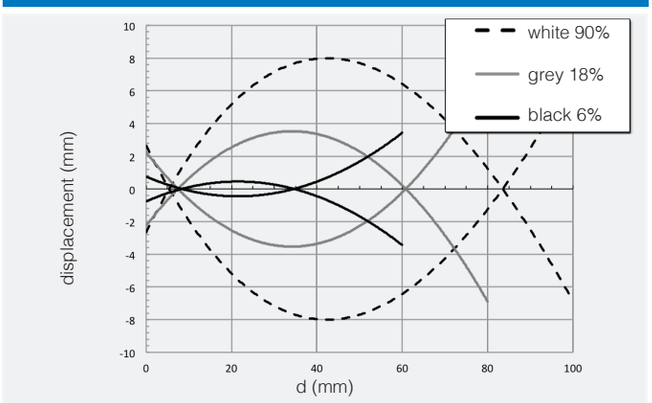

B*4/00- spot dimension**

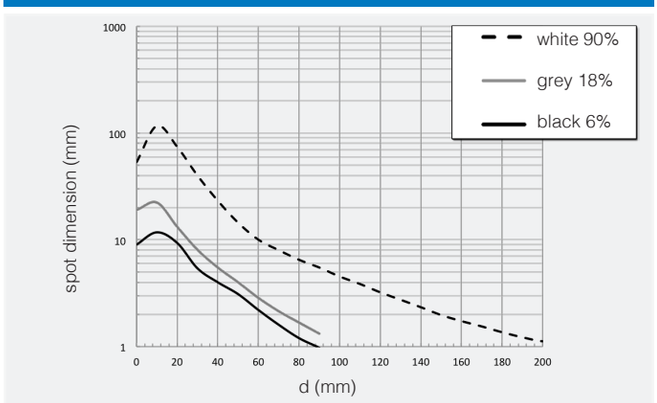

B*4/00- parallel displacement**

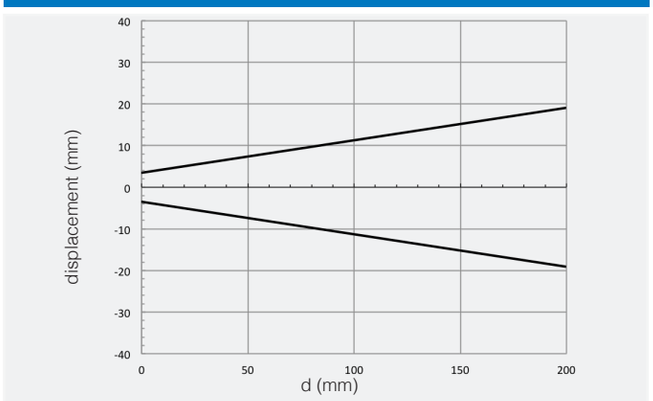

B*4/00- spot dimension**

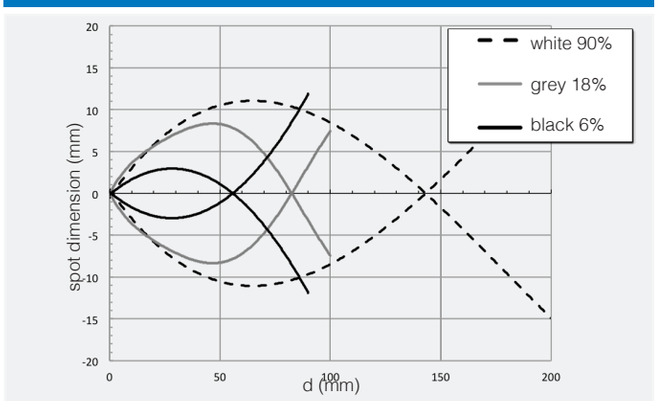

B*6/00-** excess gain

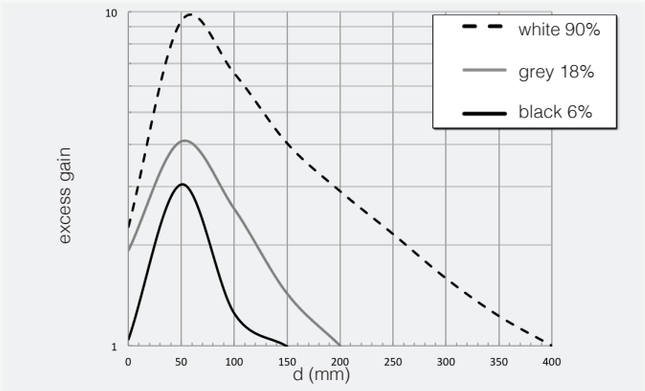

B*6/00-** spot dimension

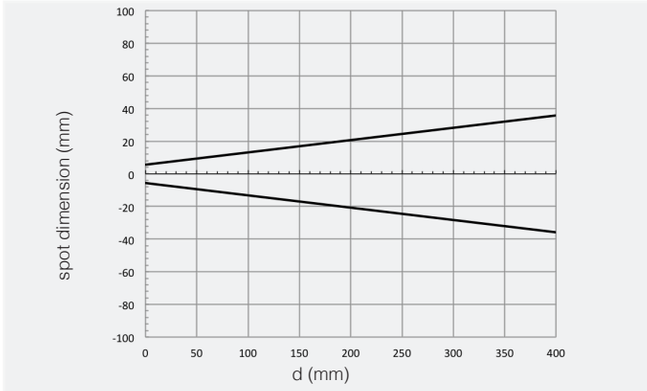

B*6/00-** parallel displacement

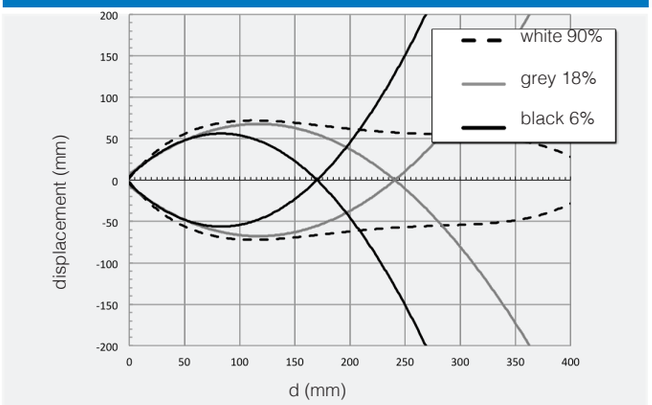

B*8/00-** excess gain

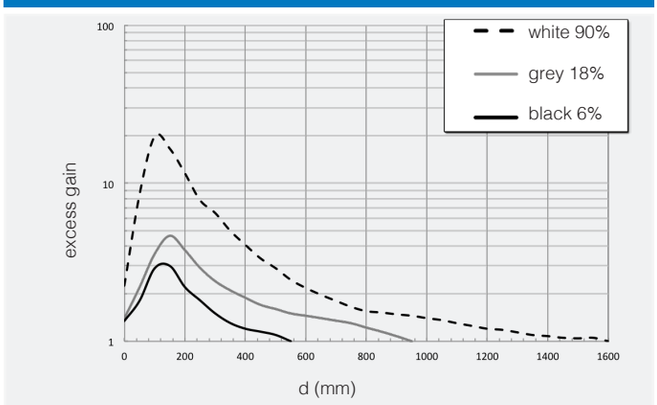

B*8/00-** spot dimension

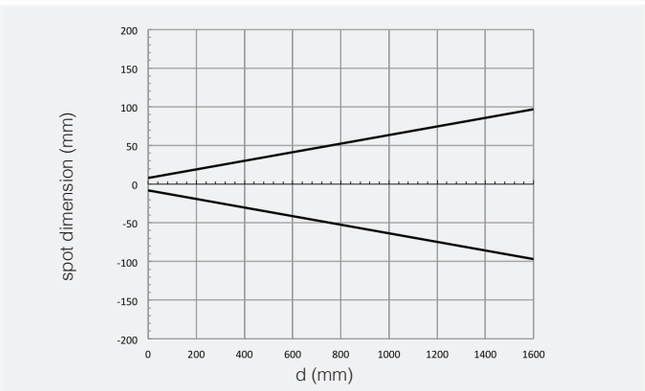

B*8/00-** parallel displacement

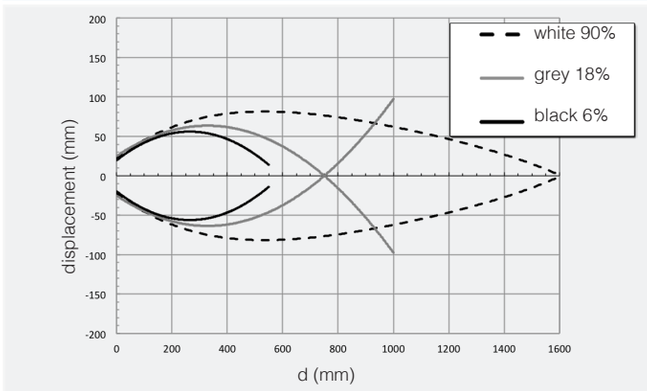

response diagrams

retro-reflective models (diagrams detected with RL110)

B*C/0*-** excess gain

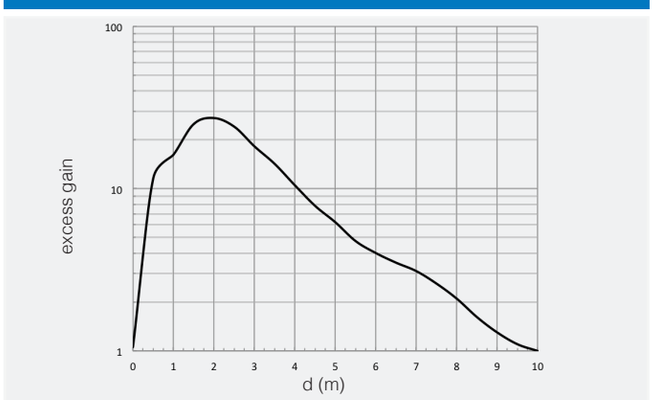

B*C/0*-** spot dimension

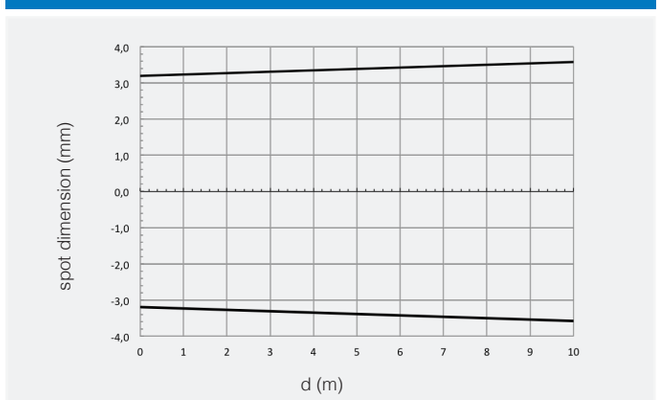

response diagrams

retro-reflective models

B*C/0*- parallel displacement**

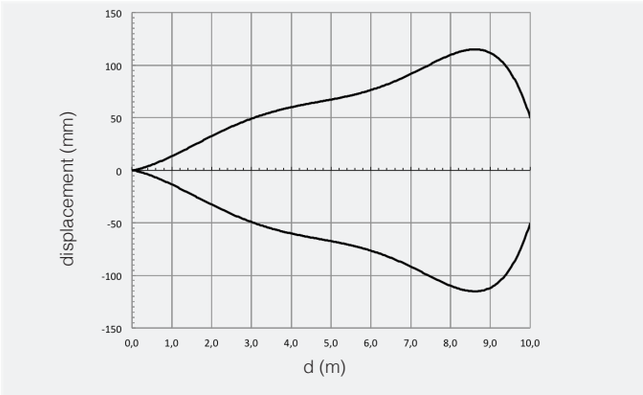

dimensions (mm)

B*2/00-0C - B*4/00-0C - B*6/00-0C - B*8/00-0C

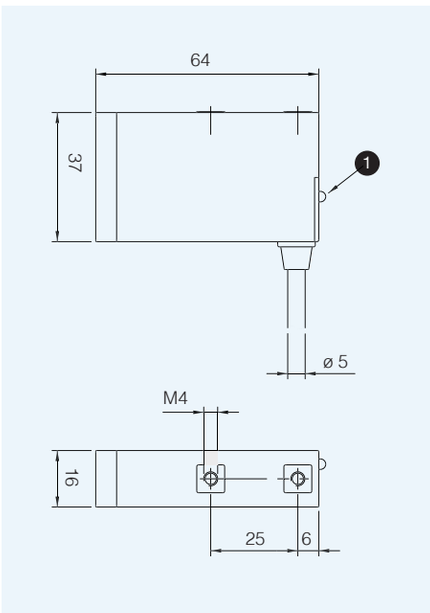

B*C/00-0C

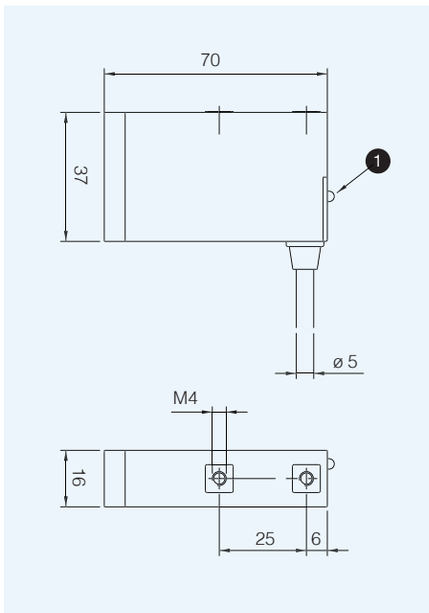

B*2/00-0E-B*4/00-0E-B*6/00-0E-B*8/00-0E

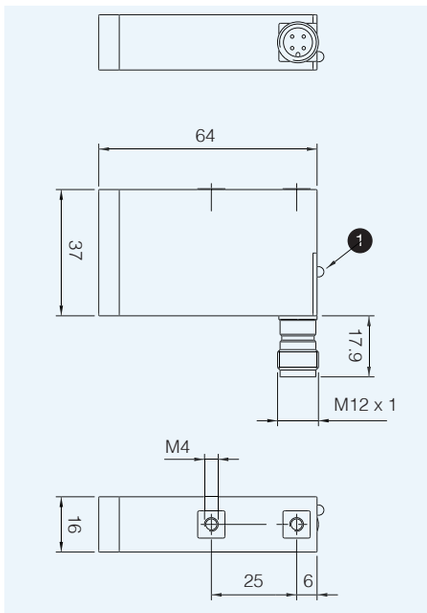

B*C/00-0E

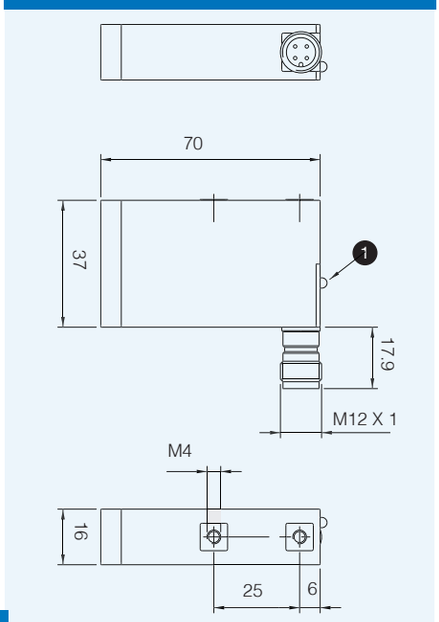

1 red LED (output state)

Plugs CD series - Accessories ST series

Q50 series

Compact cubic 50 x 50 mm
universal photoelectric sensor

features

- **Universal photoelectric sensor, excellent performances and high versatility due to the wide choice of different versions available**
- **Cable output or revolving connector, NPN/PNP outputs for Vdc models or SPDT relay output for multi -voltage Vdc / Vac models**
- **Complementary outputs NO + NC available on the Vdc models or selectable output NO/NC available on the multi-voltage Vdc/Vac models**
- **Totally protected against electrical damages**
- **Wide choice of optical functions available: Diffuse: 2 m; background suppression: 500 mm; polarized: 6m; through beam: 20 m. Dual multifunction output state LEDs**

web content

- **Application notes**
- **Photos**
- **Catalogue / Manuals**

Compact cubic 50 x 50 mm

code description

Q50 R N / B 0 - 0 E

series	Q50	50 X 50 mm cubic photoelectric sensor
emission	I	LED infrared emission
	R	LED red emission
type	6	Diffuse reflection1 m
	8	Diffuse reflection 2 m
	S	Background Suppression
	N	Polarized
	H	Emitter
	D	Receiver
output	B	Complementary output NO + NC
	0	Emitter NO/ NC selectable
emitter	0	Emitter, NPN or PNP (Supply Voltage 10 ... 30 Vdc)
	T	Emitter, Relay SPDT (Supply Voltage 12... 240 Vdc; 24…240 Vac)
housing	0	Plastic housing
cable/plug output	A	Cable 2 m
	E	Connector M12 4 pins

available models

function	distance	adjustment	DC models		AC / DC models
			cable	M12 connector	cable
diffuse	1 m	●	Q50I6/B0-0A	Q50I6/B0-0E	Q50I6/0T-0A
	2 m		Q50I8/B0-0A	Q50I8/B0-0E	Q50I8/0T-0A
background suppression	120...500 mm		Q50IS/B0-0A	Q50IS/B0-0E	-
polarized	6 m		Q50RN/B0-0A	Q50RN/B0-0E	Q50RN/0T-0A
emitter	20 m	-	Q50IH/00-0A	Q50IH/00-0E	Q50IH/0T-0A
receiver	20 m	●	Q50ID/B0-0A	Q50ID/B0-0E	Q50ID/0T-0A

technical specification

direct diffuse models

	Q50I6/0T-**	Q50I6/B0-**	Q50I8/0T-**	Q50I8/B0-**
nominal sensing distance [1]	0.1...2 m [1]		0.3...2 m [1]	
sansing range (Sd)	0.2...2 m [1]		0.5...2 mm [1]	
sensibility adjustment	single-turn potentiometer			
emission	infrared LED			
spot dimension	70 mm @ 500 mm		80 mm @ 1 m	
rotary switch	single-turn potentiometer	-	single-turn potentiometer	-
operating voltage	from 12 to 240 Vdc / from 24 to 240 Vac, 50 to 60 Hz	from 10 to 30 VDC	from 12 to 240 Vdc / from 24 to 240 Vac, 50 to 60 Hz	from 10 to 30 Vdc
ripple	-	≤ 10 %	-	≤ 10 %
no-load supply current	≤ 2.5 VA (relè ON)	≤ 40 mA	≤ 2.5 VA (relè ON)	≤ 40 mA
load current	-	≤ 200 mA	-	≤ 200 mA
output voltage drop Ud	-	≤ 2.5 Vdc @ 200 mA	-	≤ 2.5 Vdc @ 200 mA
maximum load current	3 A/30 Vdc 3 A/240 Vac	-	3 A/30 Vdc 3 A/250 Vac	-
output type	relay SPDT electrically isolated	PNP or NPN	relay SPDT electrically isolated	PNP or NPN
switching frequency	20 Hz	500 Hz	20 Hz	500 Hz
power on delay	≤ 30 ms	-	≤ 30 ms	-
power supply protections	transients	polarity reversal, transient	transients	polarity reversal, transient
output electrical protection	-	short circuit (auto reset) over voltage pulses	-	short circuit (auto reset) over voltage pulses
operating temperature range	- 25°C...+ 60°C [2]			
external light interference	5,000 lux			
EMC	in conformity with the EMC Directive according to EN 60947-5-2			
protection degree	IP67 (EN60529) [3]			
housing material	body: PC/ABS; optic: PMMA			
weight (approximate)	200 g	105 g plug 200 g cable	200 g	105 g plug 200 g cable

[1] White target 90% 200*200 mm [2] UL omologation: 0...+60 °C [3] Protection guaranteed only with plug cable well mounted

technical specification

background suppression models

	Q50IS/0B-**
	background suppression
distanza di lavoro nominale [1]	120...500 mm [1]
minimum sensing distance	120 mm
sensibility adjustment	single-turn potentiometer
emission	infrared LED
spot dimension	30 mm @ 500 mm
rotary switch	-
operating voltage	10...30 Vdc (ripple included)
ripple	≤ 10 %
no-load supply current	≤ 40 mA
load current	≤ 200 mA
output voltage drop	≤ 2.5 Vdc @ 200 mA
maximum load current	-
output type	PNP or NPN
switching frequency	500 Hz
power on delay	≤ 2 ms
power supply protections	polarity reversal, over voltage pulses
output electrical protection	short circuit (auto reset), over voltage pulses
operating temperature range	- 25°C...+ 60°C [2]
external light interference	10,000 lux
protection degree	IP67 (EN60529) [3]
EMC	in conformity with the EMC Directive according to EN 60947-5-2
housing material	body: PC/ABS; optic: PMMA
weight (approx)	105 g plug / 200 g cable

[1] White target 90% 200*200 mm [2] UL omologation: 0...+60 °C [3] Protection guaranteed only with plug cable well mounted

technical specification

polarized models

	Q50RN/0T-**	Q50RN/B0-**
nominal sensing distance Sn	0.2...6 m [1]	
minimum sensing distance	200 mm	
sensibility adjustment	single-turn potentiometer	
emission	red visible LED light	
spot dimension	280 mm @ 3 m	
rotary switch	single-turn potentiometer	-
operating voltage	from 12 to 240 VDC / from 24 to 240 VAC, 50 a 60 Hz	from 10 to 30 Vdc
ripple	-	≤ 10 %
no-load supply current	≤ 2.5 VA (relay ON)	≤ 40 mA
load current	-	≤ 200 mA
output voltage drop	-	≤ 2.5 VDC @ 200 mA
maximum load current	3 A/30 Vdc 3 A/250 Vac	-
output type	relay SPDT electrically isolated	PNP or NPN
switching frequency	20 Hz	500 Hz
power on delay	-	≤ 1 ms
power supply protections	transients	reverse polarity, transients
output electrical protection	-	overvoltage, short-circuit
operating temperature range	- 25°C...+ 60°C [2]	
external light interference	5,000 lux	
protection degree	IP67 (EN60529) [3]	
EMC	in conformity with the EMC Directive according to EN 60947-5-2	
housing material	body: PC/ABS; optic: PMMA	
weight (approx)	200 g	200 g cable 105 g plug

[1] With RL 110 reflector [2] UL omologation: 0...+60 °C [3] Protection guaranteed only with plug cable well mounted

technical specification

through-beam models

	emitter		receiver	
	Q50IH/00-**	Q50IH/0T-**	Q50ID/B0-**	Q50ID/0T-**
nominal sensing distance Sn	20 mm [1]		20 m[1]	
minimum sensing distance	-		-	
sensibility adjustment	-		single-turn potentiometer	
emission	infrared LED		-	
spot dimension	880 mm @ 10 m		-	
rotary switch	-		-	single-turn potentiometer
operating voltage	10...30 Vdc (ripple included)	12 to 240 Vdc / 24 to 240 Vac, 50 to 60 Hz	da 10 a 30 Vdc	12 to 240 Vdc / 24 to 240 Vac, 50 to 60 Hz
ripple	≤ 10 %	-	≤ 10 %	-
no-load supply current	≤ 50 mA	≤ 2.5 VA (relay ON)	≤ 40 mA	≤ 2.5 VA (relay ON)
load current	-		≤ 200 mA	-
output voltage drop	-		≤ 2.5 VDC @ 200 mA	-
maximum load current	-		-	3 A/30 Vdc 3 A/250 Vac
output type	-		PNP or NPN	relay SPDT electrically isolated
switching frequency	-		500 Hz	20 Hz
power on delay	-		≤ 1 ms	-
power supply protections	reverse polarity, transients	transients	reverse polarity, transients	transients
output electrical protection	-		overvoltage, short-circuit	-
operating temperature range	- 20°C...+ 60°C [2]			
external light interference	-		10.000 lux	
protection degree	IP67 (EN60529) [3]			
EMC	in conformity with the EMC Directive according to EN 60947-5-2			
housing material	body: PC/ABS; optic: PMMA			
weight (approx)	200 g cable 105 g plug	200 g	200 g cable 105 g plug	200 g

[1] White target 90% 200*200 mm [2] UL omologation: 0...+60 °C [3] Protection guaranteed only with plug cable well mounted

electrical diagrams of the connections

background suppression, polarized retroreflection and receiver with PNP output

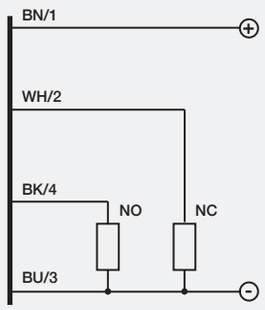

background suppression, polarized retroreflectionand receiver with NPN output

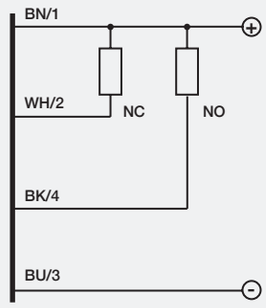

DC emitter

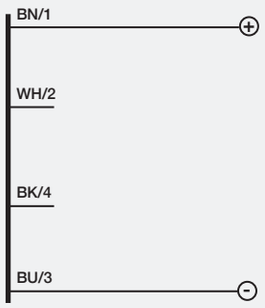

AC/DC emitter

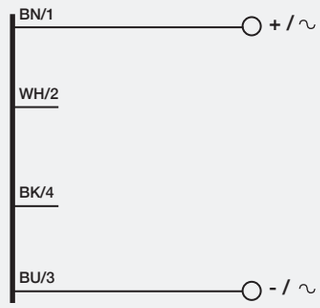

polarized retroreflection and receiver

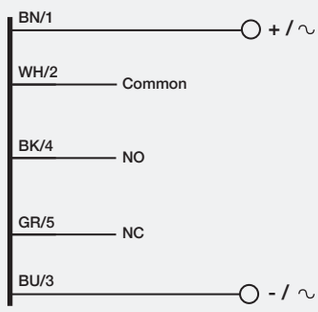

BN	brown
BU	blue
BK	black
WH	white

plug

M8

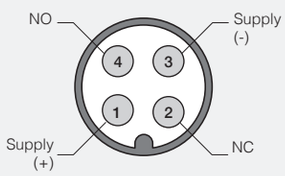

M12

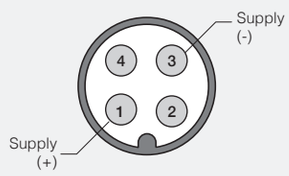

response diagrams

direct reflection models

Q50I6/-** parallel displacement**

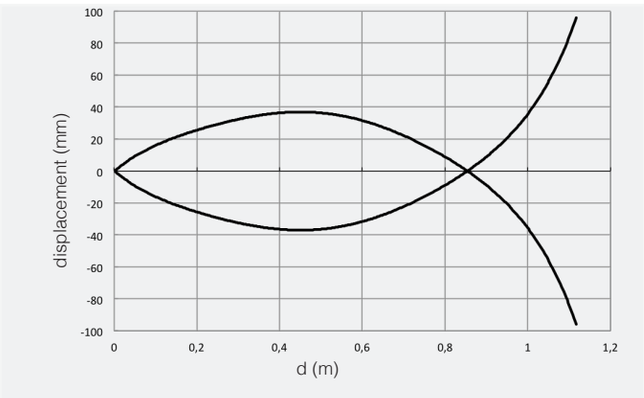

Q50I8/-** parallel displacement**

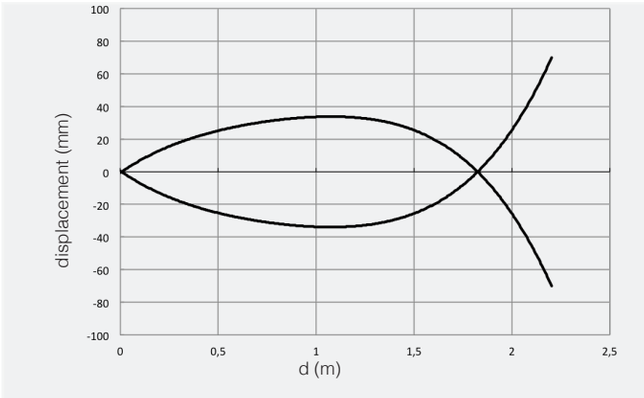

response diagrams

background suppression models

Q50IS/-** reduction of sensing distance**

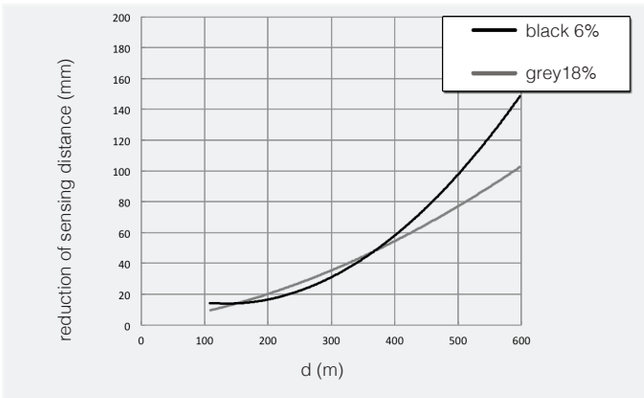

response diagrams

through-beam models models

Q50IH/-** & Q50ID/**-** Parallel displacement**

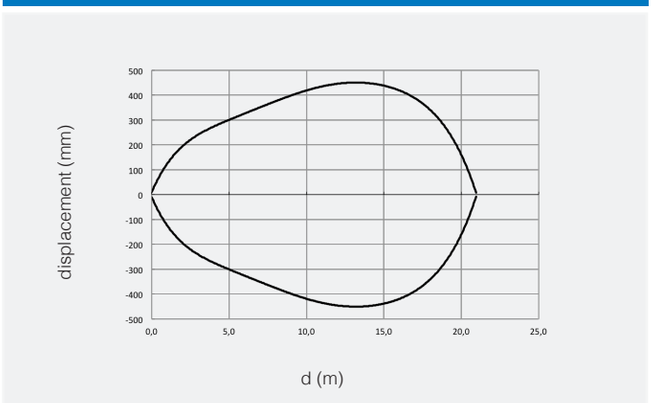

response diagrams

polarized models

Q50RN/-** parallel displacement**

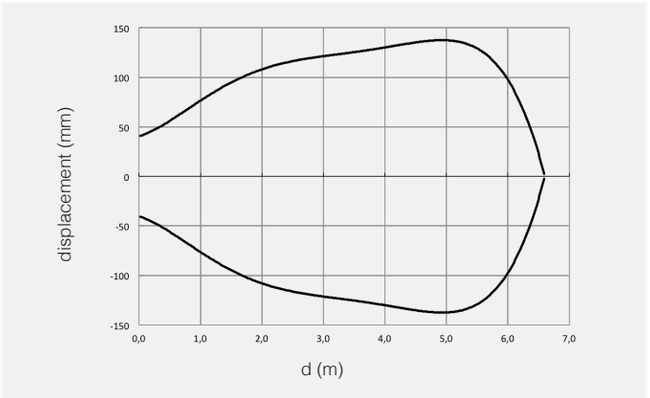

dimensions (mm)

Q50/**-0A**

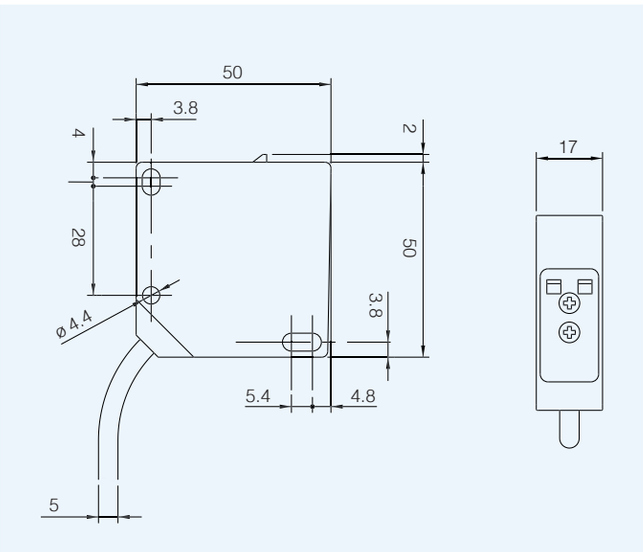

Q50/**-0E**

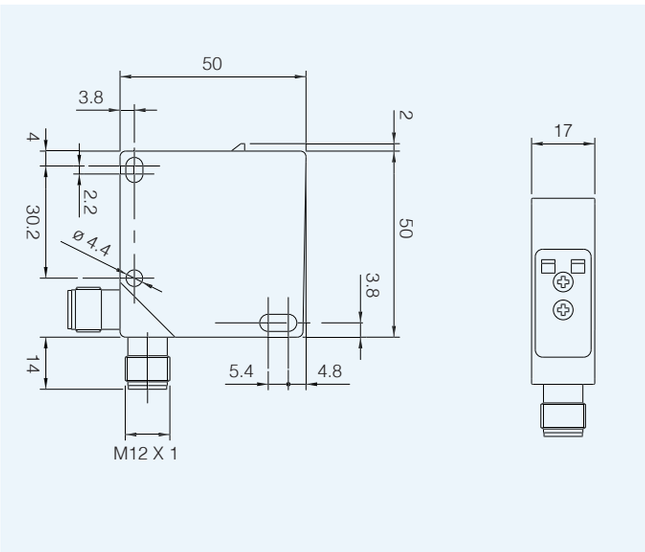

dimensions (mm)

accessories included in all models

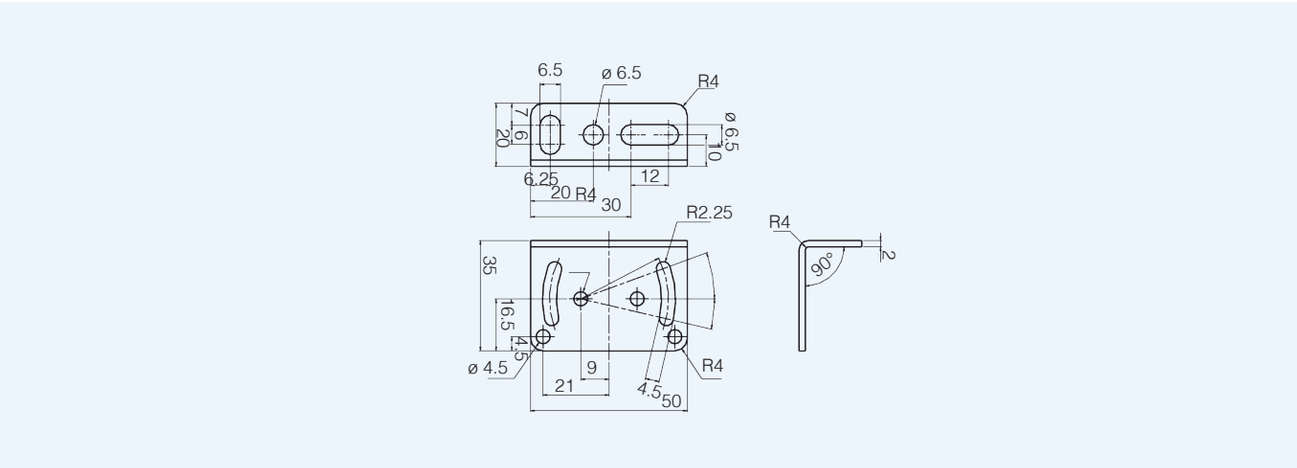

FG series

Compact photoelectric switch sensors with high performances and high detection distances

features

- **Cable output or with revolving connector, NPN or PNP output (DC models) and SPDT voltage free relay output (AC models)**
- **Selectable LO/DO output status**
- **Totally protected against electrical damages**
- **Background suppressions models: 310 mm, 600 mm**
- **Reflex polarized sensitivity adjustment 12 m**
- **Emitter and Receiver with max detecting range of 50 m**
- **Double Multifunction LED indicator: output state and using the pointing**
- **Sensitive adjustment models**

web content

- **Application notes**
- **Photos**
- **Catalogue / Manuals**

Cubic
DC - AC compact

code description

FG R W / 0 P - 0 A

series	FG	Compact cubit photoelectric switch
emission	R	Visible red emission LED
type	W	Adjut. dist. background suppression 600 mm
	S	Adjust. dist background suppression 310 mm
	N	Reflex polarized sensitivity adjustment 12 m
	H	Emitter 50 m
	D	Receiver with sensitivity adjustment 50 m
	HD	Emitter + Receiver with sensitivitiy adjustment
supply voltage	0	Supply voltage 10...30 Vdc
	D	Supply voltage 24...240 Vdc / 24...240 Vac
logic output	P	PNP logic output
	N	NPN logic output
	0	Emitter
	T	SPDT voltage free relay output
	0	Plastic housing
cable / plug output	A	Cable exit 2 m
	E	M12 plug cable exit

available models

model	distance	adjustment	cable		plug M12		models AC
			NPN	PNP	NPN	PNP	
background suppression	310 mm	•	FGRS/0N-0A	FGRS/0P-0A	FGRS/0N-0E	FGRS/0P-0E	FGRS/DT-0A
	600 mm		FGRW/0N-0A	FGRW/0P-0A	FGRW/0N-0E	FGRW/0P-0E	FGRW/DT-0A
polarized	12 m		FGRN/0N-0A	FGRN/0P-0A	FGRN/0N-0E	FGRN/0P-0E	FGRN/DT-0A
emitter + receiver	50 m		FGRHD/0N-0A	FGRHD/0P-0A	FGRHD/0N-0E	FGRHD/0P-0E	FGRHD/DT-0A

technical specification

reflex polarized models [1]

	FGRN/0*-0*	FGRN/DT-0A
		
nominal sensing distance	12 m	
blind zone mm	0.01 m	
scanning distance adjusting	potentiometer 2 turns with position indicator	
emission	red visible LED light	
spot diameter	approx. 260 mm @ 8 m	
rotary switch	control wire	light on
supply voltage	10...30 Vcc (limit value)	24...240 Vac[2] / 24...240 Vcc
ripple	5 Vpp	-
no-load supply current	35 mA	≤ 2 VA
load current (maximum)	100 mA	-
output voltage drop	1,8 V max @100 mA	-
maximum switching current	-	3 A...240 Vac[2] 3 A...30 Vcc[2]
output type	PNP o NPN open collector	relay SPDT electrically isolated
switching frequency	1.000 Hz max	33 Hz max
response time	0,15 ms	15 ms
operation temperature range	- 25°C...+ 55°C	
power supply protections	overvoltage pulses and polarity reversal	
output electrical protection	short circuit, overcurrent, overvoltage	-
protection degree	IP67 (EN60529) [3]	
ambient light immunity	3,000 lux (incandescent lamp), 10,000 lux (sunlight) (luce solare)	
housing material	PBT corpo; PMMA ottica	
cable PVC 2 m	4 x 0.18 mm^2 ø 3.8 mm	5 x 0.76 mm^2 ø 6.3 mm
weight (approximate)	150 g cable 40 g plug	160 g

[1] With RL 123 included reflector [2] Ensure spark extinguishing for inductive or capacitive load [3] Protection guaranteed only with plug cable well mounted

technical specification

background suppression

	FGRS/0*-0*	FGRW/0*-0*	FGRS/DT-0A	FGRW/DT-0A
nominal sensing distance	90...310 mm [2]	110...600 mm [2]	90...310 mm [2]	110...600 mm [2]
blind zone mm	5...15 mm	10...35 mm	5 ÷ 15 mm	10 ÷ 35 mm
scanning distance adjusting	potentiometer 2 turns with position indicator			
emission	red visible LED light			
spot diameter	30 mm @ 300 mm	30 mm @ 500 mm	30 mm @ 300 mm	30 mm @ 500 mm
rotary switch	control wire		light on	
supply voltage	10...30 Vcc (limit value)		24...240 Vac[2] / 24...240 Vcc	
ripple	5 Vpp		-	
no-load supply current	35 mA		≤ 2 VA	
load current (maximum)	100 mA		-	
output voltage drop	1.8 V max @100 mA		-	
maximum switching current	-		3 A...240 Vac[2] 3 A...30 Vcc[2]	
output type	PNP or NPN open collector		relay SPDT electrically isolated	
switching frequency	160 Hz max		33 Hz massima	
response time	2 ms		15 ms	
output electrical protection	overvoltage pulses and polarity reversal			
power supply protections	short circuit, overcurrent, overvoltage		-	
operation temperature range	- 25 ...+ 55° C			
ambient light immunity	10,000 Lux minimum sunlight 3,000 Lux min HF lamp			
protection degree	IP67 (EN60529) [3]			
housing material	Housing: ABS; optic: PMMA			
cable PVC 2 m	4 x 0.18 mm^2 ø 3.8 mm		5 x 0.76 mm^2 ø 6.3 mm	
weight (approximate)	150 g cable 40 g plug		160 g	

[1] White target 90% 100x100 mm [2] Ensure spark extinguishing for inductive or capacitive load [3] Protection guaranteed only with plug cable well mounted

technical specification

through-beam models

	FGRHD/0*-0*		FGRHD/DT-0A	
	FGRH/0*-0* (emitter)	FGRD/0*-0* (receiver)	FGRH/D0-0A (emitter)	FGRD/DT-0A (receiver)
nominal sensing distance	50 m			
scanning distance adjusting	potentiometer 2 turns with position indicator			
emission	red LED light	–	red LED light	–
spot diameter	600 mm @ 20 m	-	600 mm @ 20 m	-
rotary switch	-	control wire	–	light on
supply voltage	10...30 Vcc (limit value)		24...240 Vac(2) / 24...240 Vcc	
ripple	5 Vpp		-	
no-load supply current	≤ 35 mA	≤ 20 mA	≤ 20 mA	≤ 2 mA
load current (maximum)	-	100 mA	-	
output voltage drop	-	1.8 V max @100 mA	-	
maximum switching current	-		3 A...240 Vac(1) 3 A...30 Vcc(1)	
output type	-	PNP or NPN open collector	-	relay SPDT electrically isolated
switching frequency	-	1,000 Hz max	–	33 Hz massima
response time	-	0.5 ms	-	≤ 15 ms
output electrical protection	overvoltage pulses and polarity reversal			
power supply protections	–	short circuit, overcurrent, overvoltage	–	
operation temperature range	- 25 ...+ 55° C			
ambient light immunity	10,000 Lux minimum sunlight 3,000 Lux min HF lamp			
protection degree	IP67 (EN60529) (2)			
housing material	Housing: ABS; optic: PMMA			
cable PVC 2 m	2 x 0.18 mm² ø 3.8 mm	4 x 0.18 mm² ø 3.8 mm	2 x 0.76 mm² ø 6.3 mm	5 x 0.76 mm² ø 6.3 mm
weight (approximate)	80 g plug 300 g cable 2m		310 g	

(1) Ensure spark extinguishing for inductive or capacitive load (2) Protection guaranteed only with plug cable well mounted

electrical diagrams of the connections

background suppression, polarizated, receiver PNP output

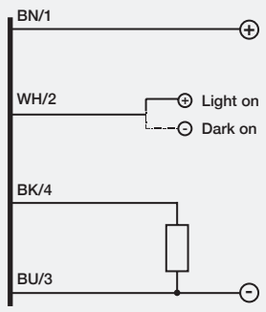

background suppression, polarizated, receiver NPN output

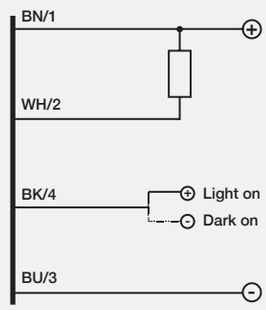

emitter DC

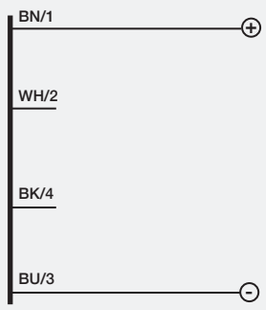

emitter AC/DC

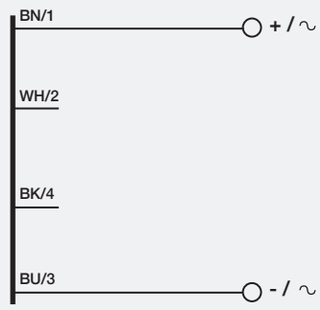

background suppression, reflex with polarizing gilter and receiver with relay output

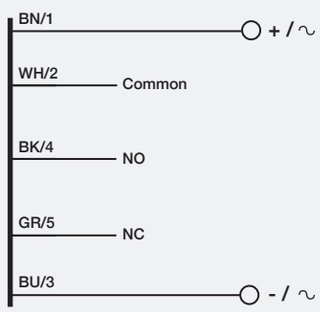

BN	brown
BU	blue
BK	black
WH	withe
PK	pink
GY	gray

plug

M12 background suppression, polarized, receiver	M12 emitter
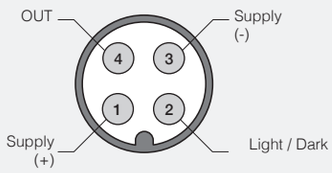	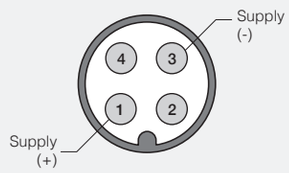

response diagrams

polarized models

FGRN/-** excess gain**

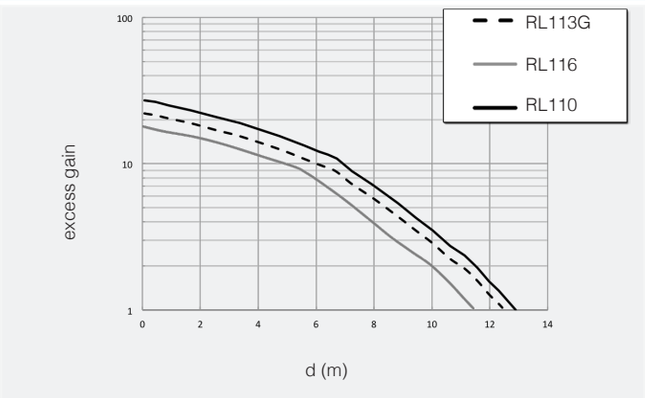

response diagrams

background supression models

FGRS/-** reduction of sensing distance**

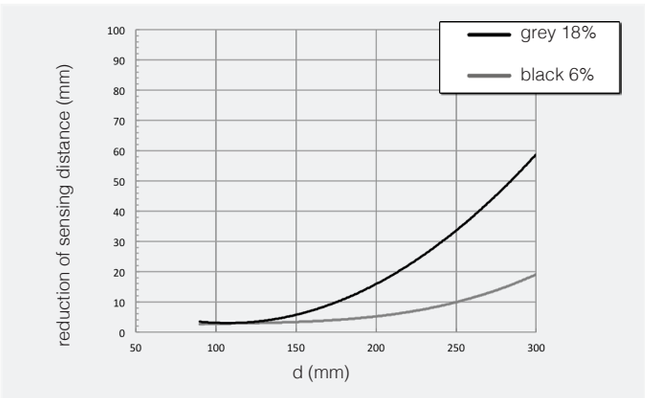

FGRW/-** reduction of sensing distance**

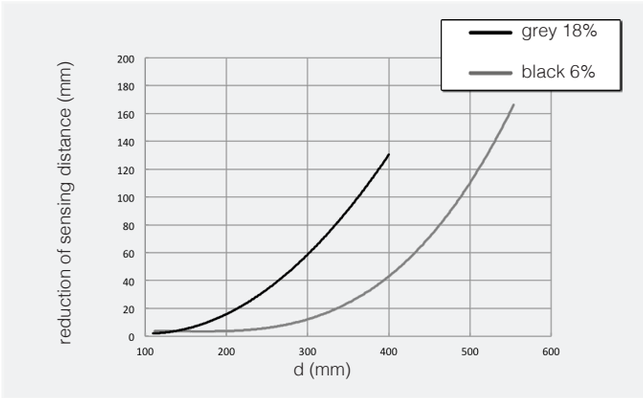

response diagrams

through-beam models

FGRH/-** & FGRH/**-** excess gain**

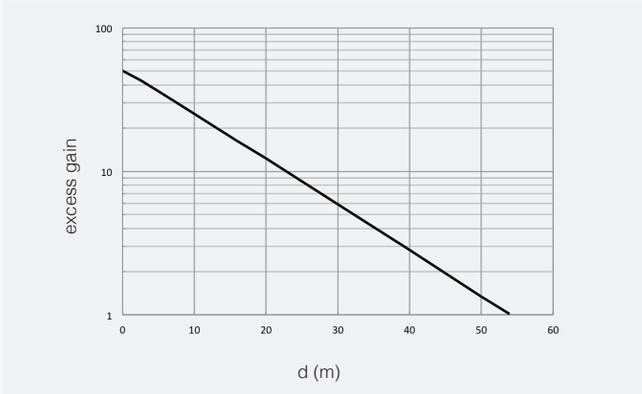

dimensions (mm)

FGR*/-*A**

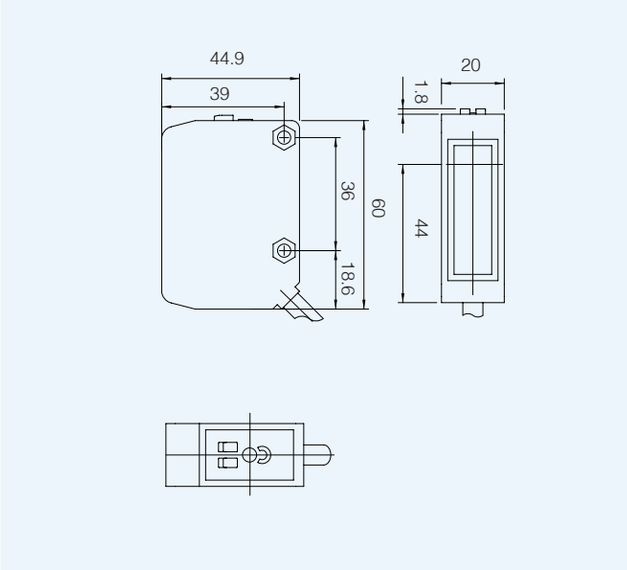

FGR*/-*E**

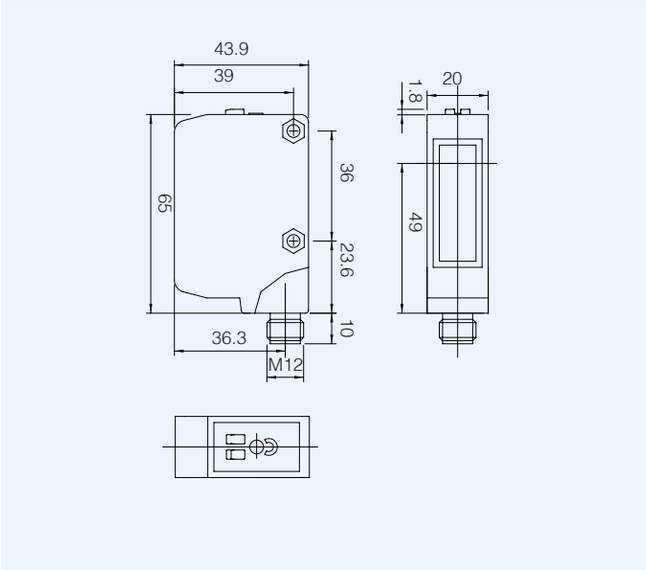

dimensions (mm)

accessories included

RL 123

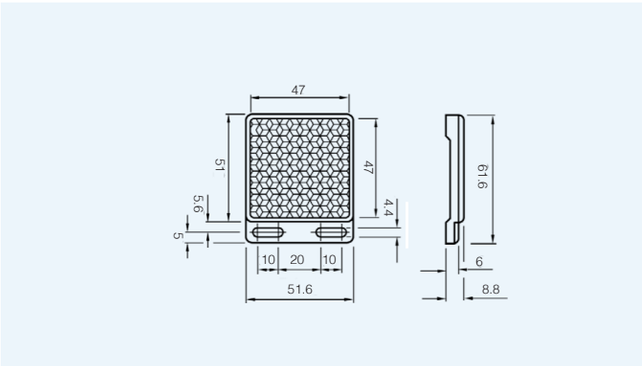

STFG 00

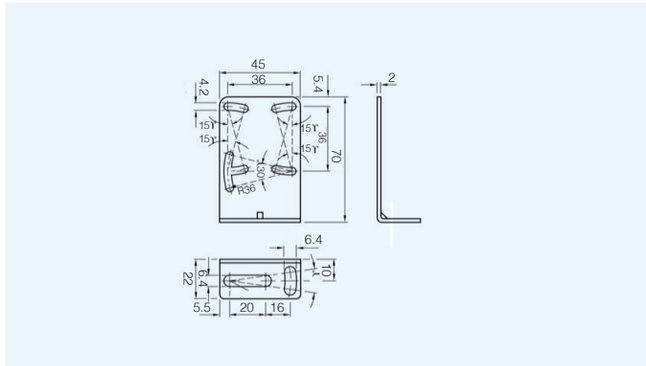

notes

RX series

Maxi with static output DC
or with relay output AC/DC

features

- **Models: diffuse reflection, retro-reflective, polarized, through-beam and background suppression**
- **Series with high performances and wide possibilities of installation**
- **High sensing distance and very small dimensions**
- **Relay output or multifunctional DECOUT®**
- **Timer function delay on, delay off, one shot; trimmer for sensitivity adjustment**
- **Switch reducing the emission for fine detection in through-beam types**
- **LED alignment indicator with 360° visibility, 2 LED indicators (stable signal, output)**
- **M12 standard plug cable exit; axial and right angle brackets**

web content

- **Application notes**
- **Photos**
- **Catalogue / Manuals**

Maxi with static output DC
or with relay output AC/DC

code description

RX 6 / 0 0 - 1 A

series	RX	Rectangular photoelectric sensor
type	6	1000 mm diffuse reflection
	8	2000 mm diffuse reflection
	C	12 m retro-reflective
	P	8 m polarized retro-reflective
	S	Background suppression 0,05 - 0,3 m
	L	Background suppression 0,25 - 1 m
	E	Emitter 20-60 Vdc / 20-253 Vac
	R	Receiver
timer function	0	Without timer function
	T	With timer function
output	1	DECOUT® output / 10-30Vdc
	3	Relay output / 20-60Vdc - 20-253Vac
fixing slide	A	Without fixing slide
	B	With fixing slide
version		Standard version
	37	RX8 model with sensing distance up to 4,5 m

available models

models without fixing slide

function	distance (m)	10...30 Vdc DECOUT®		20...60 Vdc / 20...253 Vac	relay
		no timer function	timer function	no timer function	timer function
background suppression	0,05...0,3	RXS/00-1A	RXS/0T-1A	RXS/00-3A	RXS/0T-3A
	0,25...1	RXL/00-1A	RXL/0T-1A	RXL/00-3A	RXL/0T-3A
diffuse reflection	1	RX6/00-1A	RX6/0T-1A	RX6/00-3A	RX6/0T-3A
	2	RX8/00-1A	RX8/0T-1A	RX8/00-3A	RX8/0T-3A
	4,5	RX8/00-1A37	RX8/0T-1A37	RX8/00-3A37	RX8/0T-3A37
retroreflective	12	RXC/00-1A	RXC/0T-1A	RXC/00-3A	RXC/0T-3A
polarized	6	RXP/00-1A	RXP/0T-1A	RXP/00-3A	RXP/0T-3A
emitter	-	-	-	RXE/00-3A	-
emitter with check	-	-	-	-	-
receiver	16...32	-	-	RXR/00-3A	RXR/0T-3A

available models

models with fixing slide

function	distance (m)	10...30 Vdc DECOUT®		20...60 Vdc / 20...253 Vac	relay
		no timer function	timer function	no timer function	timer function
background suppression	0,05...0,3	RXS/00-1B	RXS/0T-1B	RXS/00-3B	RXS/0T-3B
	0,25...1	RXL/00-1B	RXL/0T-1B	RXL/00-3B	RXL/0T-3B
diffuse reflection	1	RX6/00-1B	RX6/0T-1B	RX6/00-3B	RX6/0T-3A
	2	RX8/00-1B	RX8/0T-1B	RX8/00-3B	RX8/0T-3B
	4,5	RX8/00-1B37	RX8/0T-1B37	RX8/00-3B37	RX8/0T-3B37
retroreflective	12	RXC/00-1B	RXC/0T-1B	RXC/00-3B	RXC/0T-3B
polarized	6	RXP/00-1B	RXP/0T-1B	RXP/00-3B	RXP/0T-3B
emitter	-	-	-	RXE/00-3B	-
emitter with check	-	-	-	-	-
receiver	16...32	-	-	RXR/00-3B	RXR/0T-3B

tecnical specification

direct diffuse, retro-reflective, backgroud suppression models and through-beam

	static output - DC						relay output - AC/DC						
	diffuse reflection		retro-reflective		diffuse reflection		diffuse reflection		retro-reflective		diffuse reflection		through-beam
	-		standard	polarized	background suppr.		-		standard	polarized	background suppr.		without check
	RX6/0*-1*	RX8/0*-1*	RXC/0*-1*	RXP/0*-1*	RXS/0*-1*	RXL/0*-1*	RX6/0*-3*	RX8/0*-3*	RXC/0*-3*	RXP/0*-3*	RXS/0*-3*	RXL/0*-3*	RXE/0*-3* + RXR/0*-3*
nominal sensing distance Sn	1 m (1)	2 m (1)	12 m (2)	6 m (2)	0,05... 0,3 m (1)	0,25... 1 m (1)	1 m (1)	2 m (1)	12 m (2)	6 m (2)	0,05... 0,3 m (1)	0,25... 1 m (1)	16 - 32 m
emission	infrared (880 nm)			red (660 nm)	infrared (880 nm)					red (660 nm)	infrared (880 nm)		
tollerance	- 10...+ 30 %		EG ≥ 2 at Sr		0...+ 10 %		- 10...+ 30 %		EG ≥ 2 at Sr		0...+ 10 %		EG≥2 at Sr
hysteresis	2...10% of the nominal sensing distance Sn												10 %
repeatability	5 %												
operating voltage	10...30 Vdc						20...253 Vac / 50 -60 Hz						
ripple	≤ 10 % max						-						-
no-load supply current	25 mA				40 mA		25 mA_{RMS}				30 mA_{RMS}		15 mA_{RMS} 30 mA_{RMS}
load current	≤ 100 mA						-						3A-250 Vac 3A-30 Vdc (750 VA / 90 W)
leakage current	≤ 10 µA						-						
voltage drop	1,2V max						-						
output type	static DECOUT®						relay						
switching frequency	500 Hz						25 Hz						
power on delay	100 ms												
timing functions	from 0,1s to 10s, deley ON, deley OFF, one shot												
supply electrical protections	polarity reversal, transient						transient (AC), over voltages (DC)						
output protection	AI cortocircuito (memoria)						-						
temperature range	- 25°C...+ 70°C (without freeze)			- 25°C... + 60°C	- 25°C...+ 70°C (without freeze)					- 25°C... + 60°C	- 25°C...+ 70°C		
temperature drift	10 % Sr												
protection degree	IP65 (EN60529) (3)												
external light interference	≥ 5.000 lux (incandescent lamp)		≥ 10.000 lux (incandescent lamp)		≥ 5.000 lux (incandescent lamp)				≥ 10.000 lux (incandescent lamp)		≥ 5.000 lux (incandescent lamp)		10.000 lux (incandescent lamp)
emitter LEDs	-												green (supply) red (dist. x 2)
receiver LEDs	rear red (output state), superior red (alignment), green (stable signal)												
housing material	polycarbonate (glass fiber reinforced)												
lenses material	plastic												
weight (approximate)	145 g without fixing slide / 165 g with fixing slide												

(1) With 100 x 100 mm white matt paper EG=1.5 (2) With standard reflector Ø 80 mm (RL110 supplied seperately) (3) Protection guaranteed only with plug cable well mounted

electrical diagrams of the connections

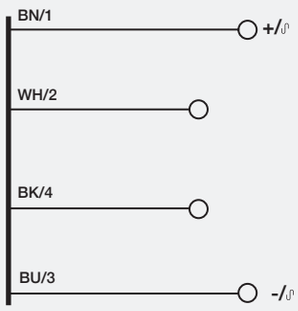

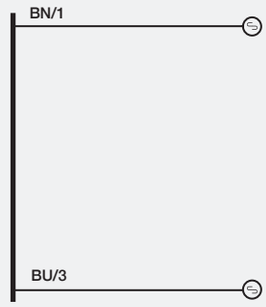

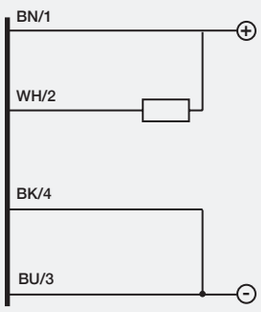

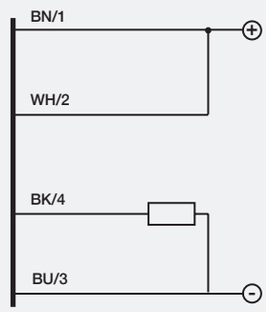

plug

M12 relay output AC-DC	M12 emitter AC-DC	M12 DECOUT®

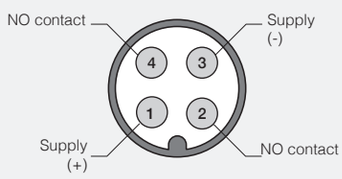

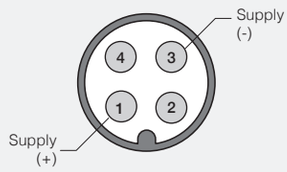

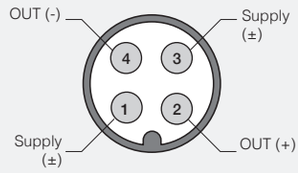

response diagrams

direct diffuse models

RX6/-** excess gain**

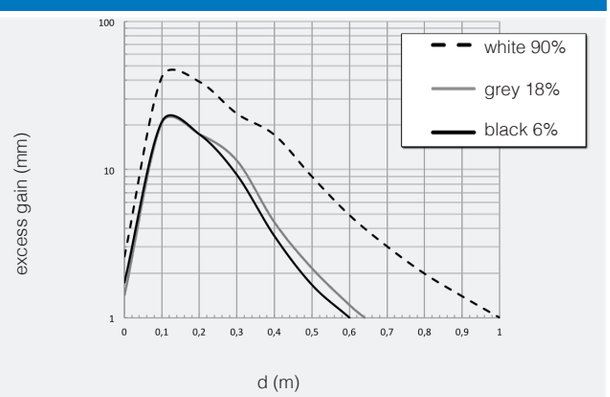

RX6/-** spot dimension**

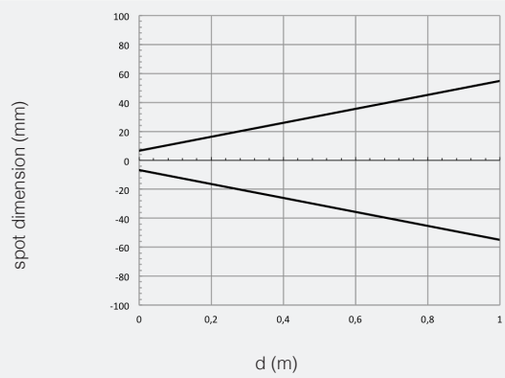

RX6/**-** parallel displacement

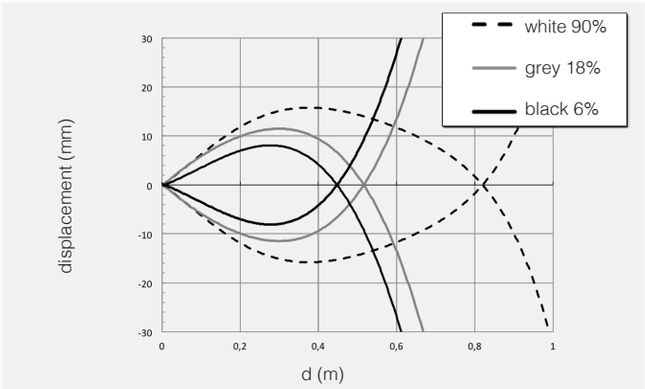

RX8/**-** excess gain

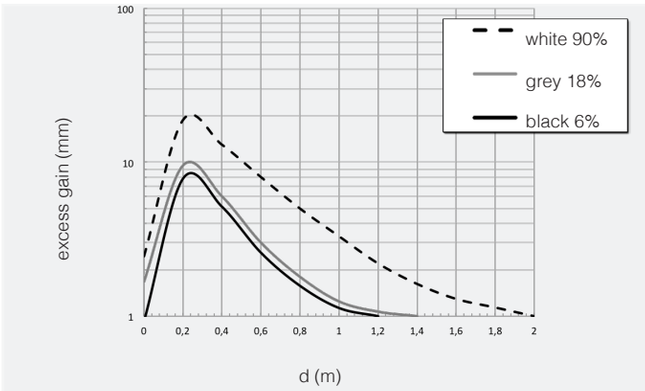

RX8/**-** spot dimension

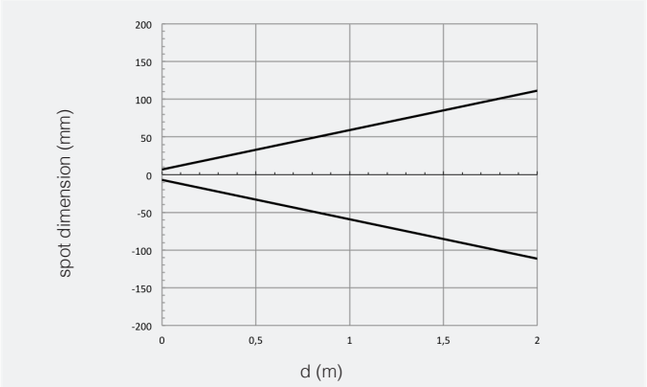

RX8/**-** parallel displacement

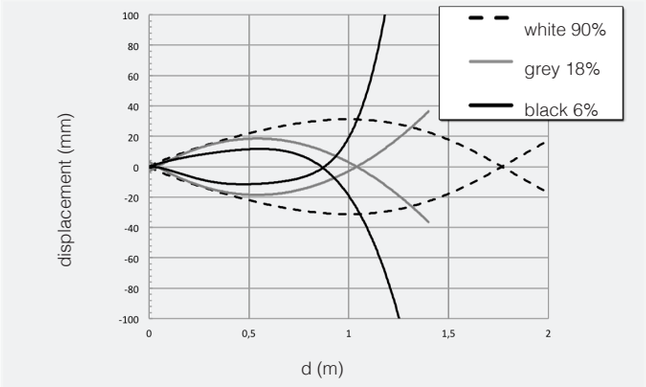

RX8/**-**37 excess gain

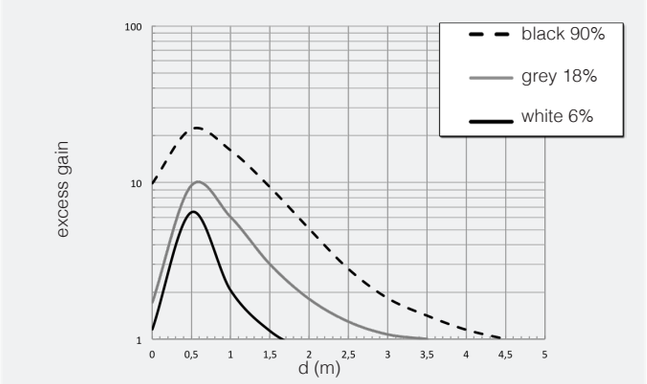

RX8/**-**37 spot diameter

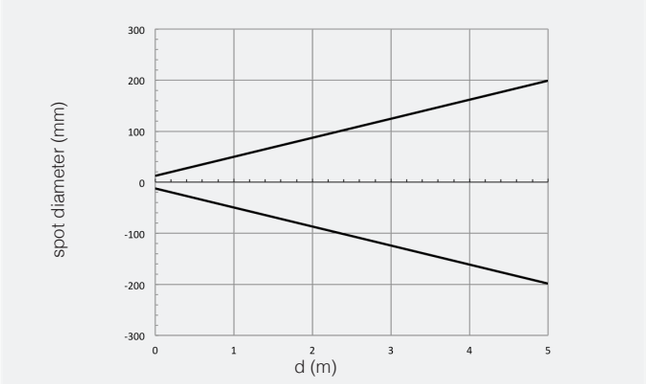

RX8/**-**37 parallel displacement

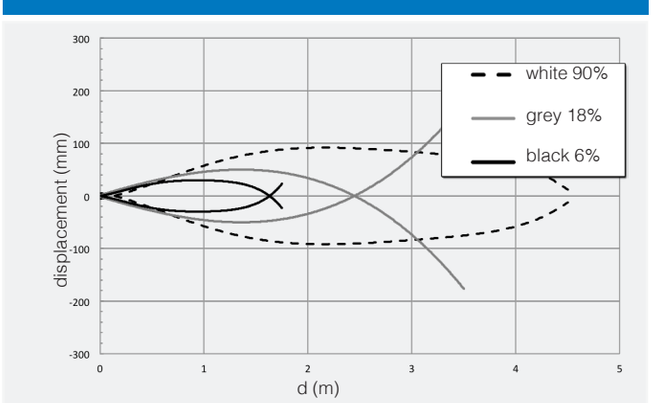

response diagrams

retro-reflective models

RXC/**-**excess gain

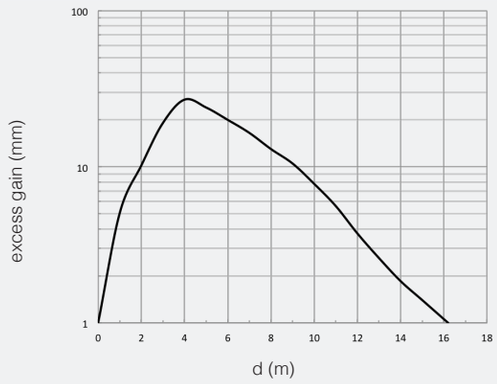

RXC/**-** spot dimension

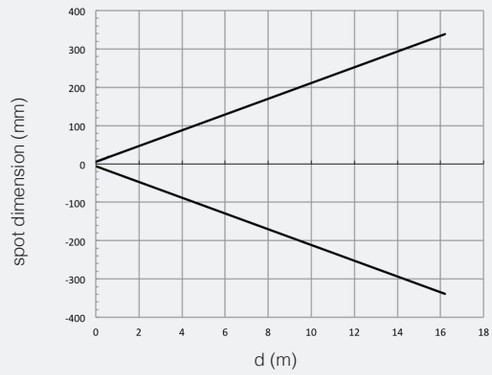

RXC/**-** parallel displacement

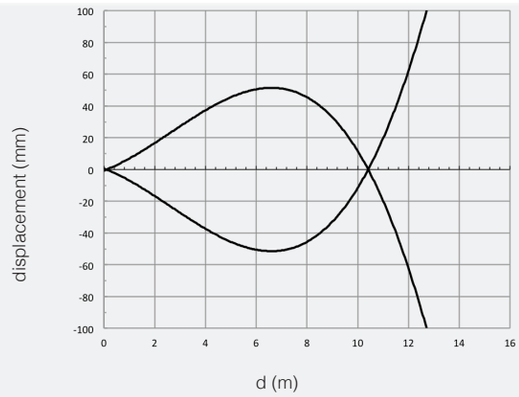

RXC/**-** excess gain

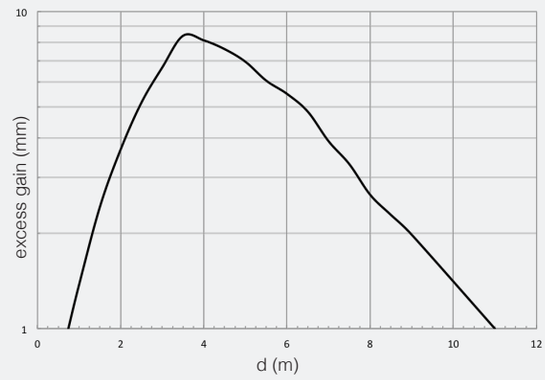

RXC/**-**spot dimension

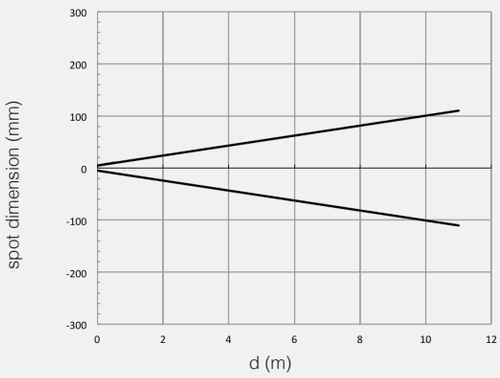

RXC/**-** parallel displacement

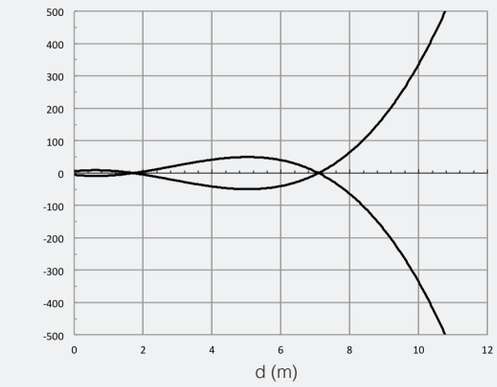

response diagrams

background suppression models

RXS/**-** reduction of sensing distance

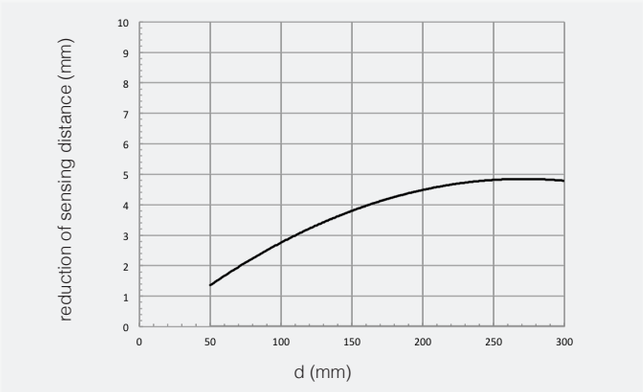

RXS/**-** spot dimension

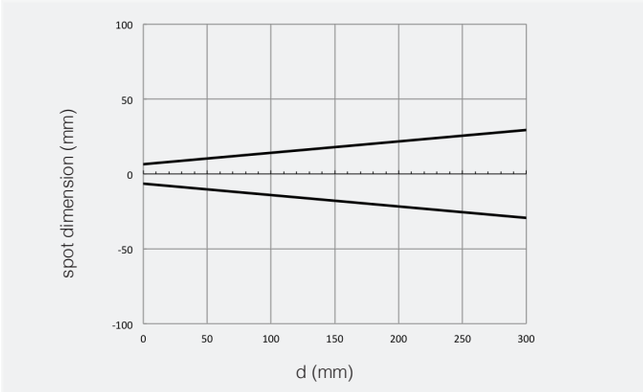

RXS/**-** parallel displacement

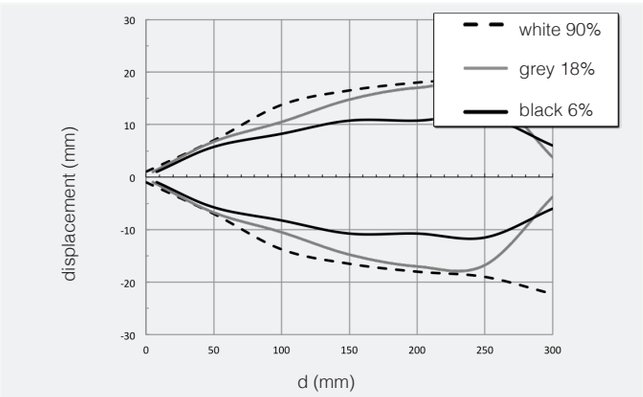

RXL/**-** reduction of sensing distance

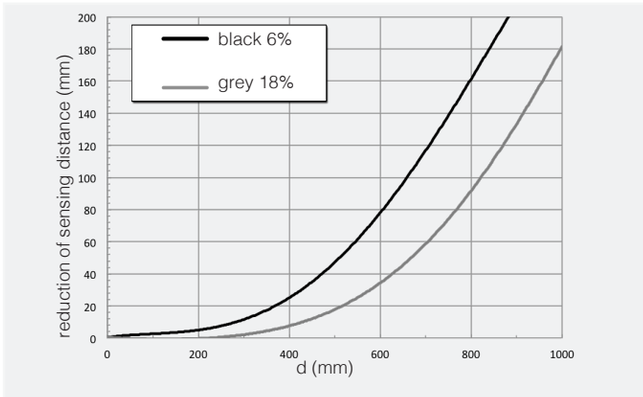

RXL/**-**spot dimension

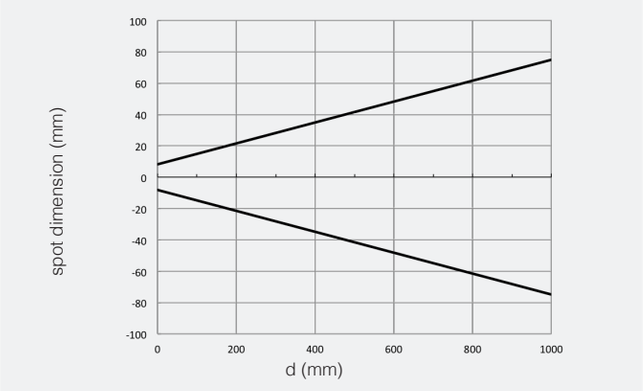

RXL/**-** parallel displacement

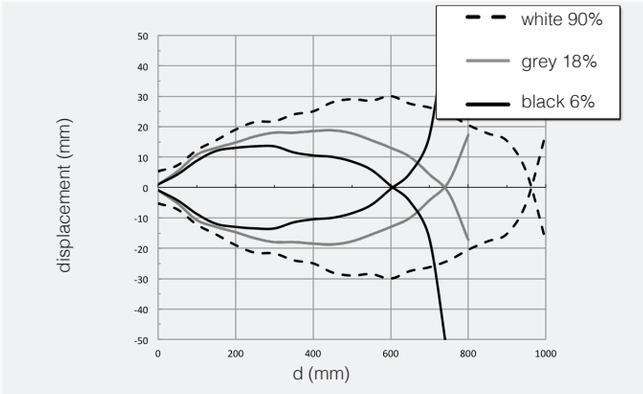

response diagrams

through-beam models

RXE/00-0* - RXR/00-0* excess gain

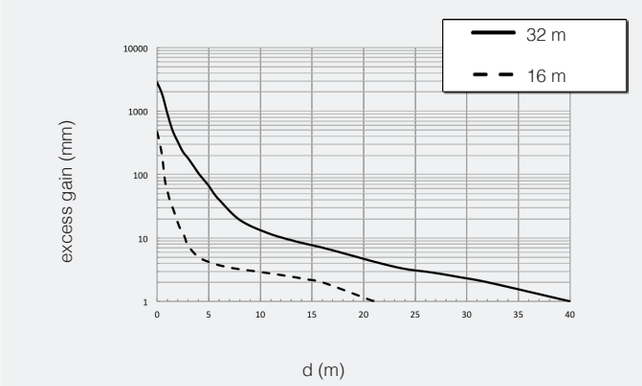

RXE/00-0* - RXR/00-0* spot dimension

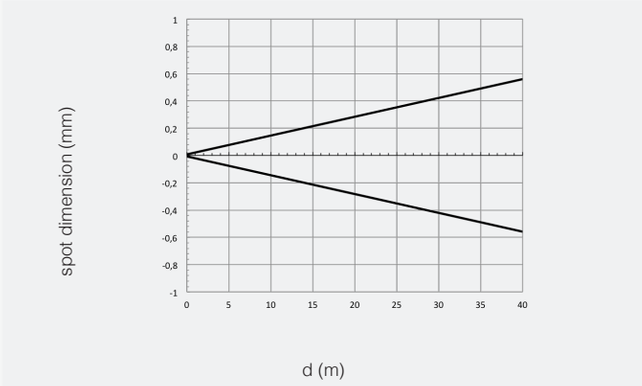

RXE/00-0* - RXR/00-0* parallel displacement

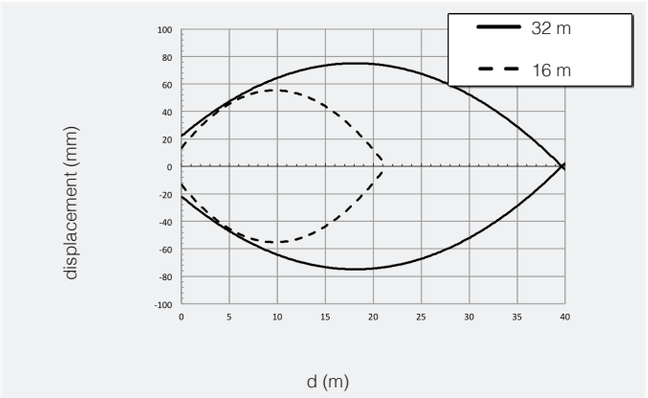

dimensions (mm)

RX*/**-*A

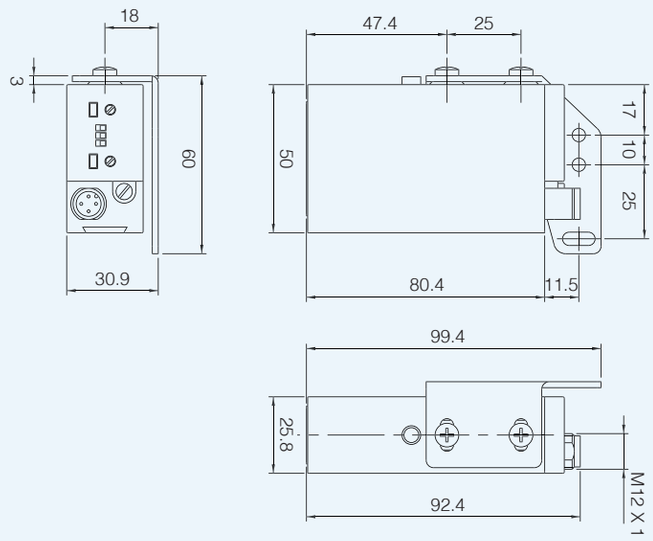

RX*/**-*B

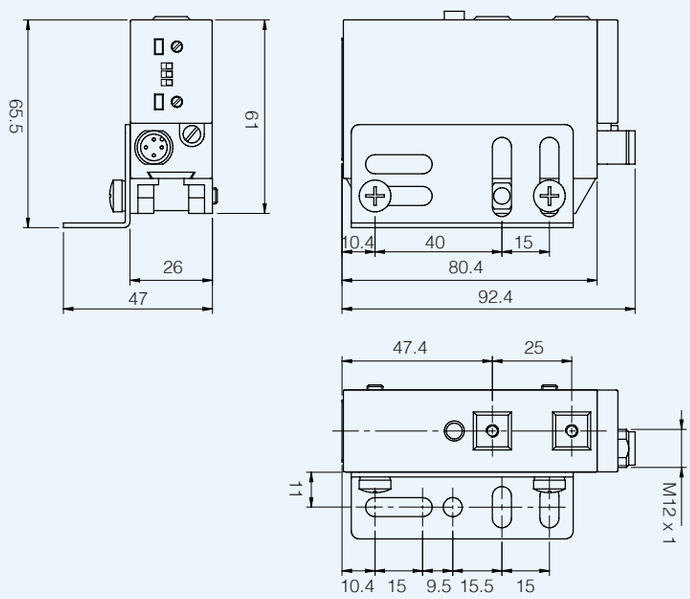

notes

Forks

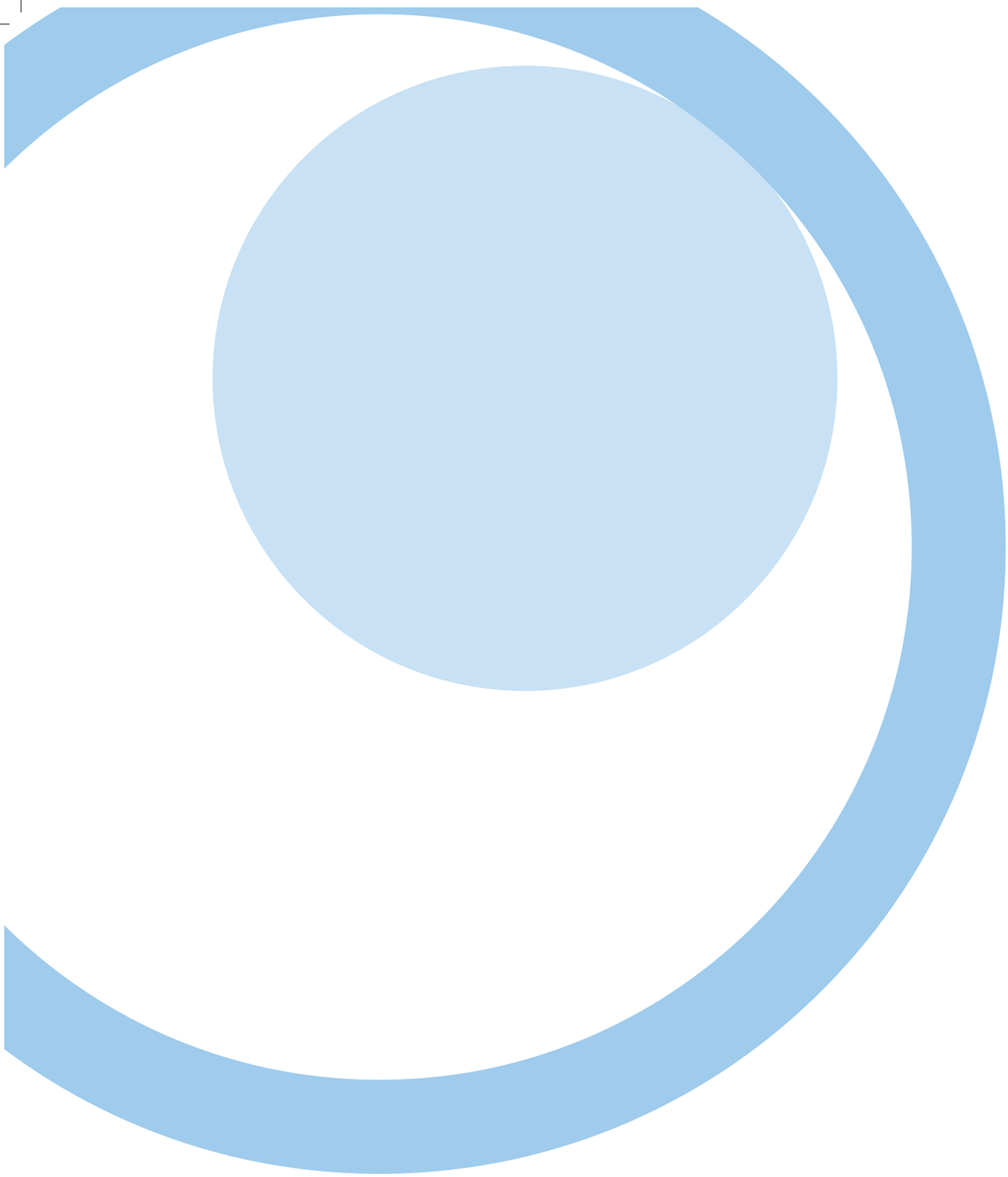

FC5 series

Photoelectric fork for objects detection without regulation

features

- Plug and Play without adjustment
- High power RED LED emission
- Minimum size object detection 0,8 mm
- Metal housing
- Connettore M8 a 3 pins
- LED Indicator high visibility
- Switching frequency 4 KHz
- -10…+60 °C operating temperature range
- 3 wires: PNP or NPN, LO or DO

web contents

- Application notes
- Photos
- Catalogue / Manuals

code description

FC5 R / D P - 05 06 - 1 F

series	FC5	Fork detection for objects
emission	R	LED red emission
light / dark	D	Dark ON
	L	Light ON
PNP / NPN output	P	PNP digital output
	N	NPN digital output
width slit detection	05	Width slit detection 50 mm
	08	Width slit detection 80 mm
	12	Width slit detection 120 m
deapth slit detection	06	Depth slit detection 40 mm
	12	Depth slit detection 124 mm
housing	1	Metal housing - aluminium
plug	F	Plug M8 3 pin

available models

supply	installation	width (mm)	depth (mm)	LO		DO	
				NPN	PNP	NPN	PNP
12...24 Vdc	M8 3 pins	50	60	FC5R/LN-0506-1F	FC5R/LP-0506-1F	FC5R/DN-0506-1F	FC5R/DP-0506-1F
		80		FC5R/LN-0806-1F	FC5R/LP-0806-1F	FC5R/DN-0806-1F	FC5R/DP-0806-1F
		120	124	FC5R/LN-1212-1F	FC5R/LP-1212-1F	FC5R/DN-1212-1F	FC5R/DP-1212-1F

technical specification

	FC5R/**-**-**
	
nominal sensing distance	50...120 mm
minimum detectable object	0.8 mm
emission	red LED, modulation of light
external ligth interference	10,000 lux (5,000 lux incandescent lamp)
operating voltage	12 ... 24 Vdc (with protection against reverse polarity)
max ripple content	10%
no-load supply current	≤ 20 mA
load current	100 mA
output voltage drop	≤ 1.5 V @ IL = 100 mA
switching frequency	4,000 Hz
power supply protections	inverse-polarity protected short-circuit output protected interference suppression.
temperature range	- 10 ...+ 60 °C
storage temperature	- 40 ...+ 80 °C
protection degree	IP67 (EN60529)
power on delay	150 ms max
housing material	painted aluminium and polyamide/glass
plug	M8 3 pin
weight (approximate)	80 ...190 g

electrical diagrams of the connections

NPN	PNP
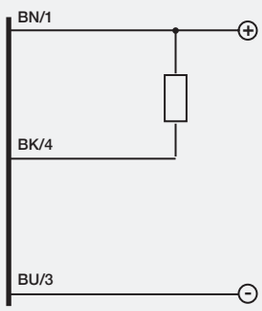	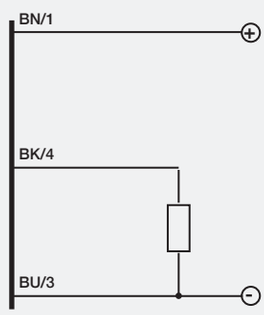

BN	brown
BU	blue
BK	black
WH	white
PK	pink
GY	gray

plug

M8 FC5R/-**-****

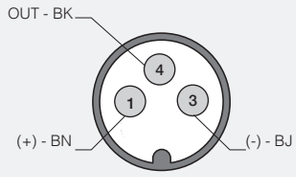

dimensions (mm)

FC5R/-**-****

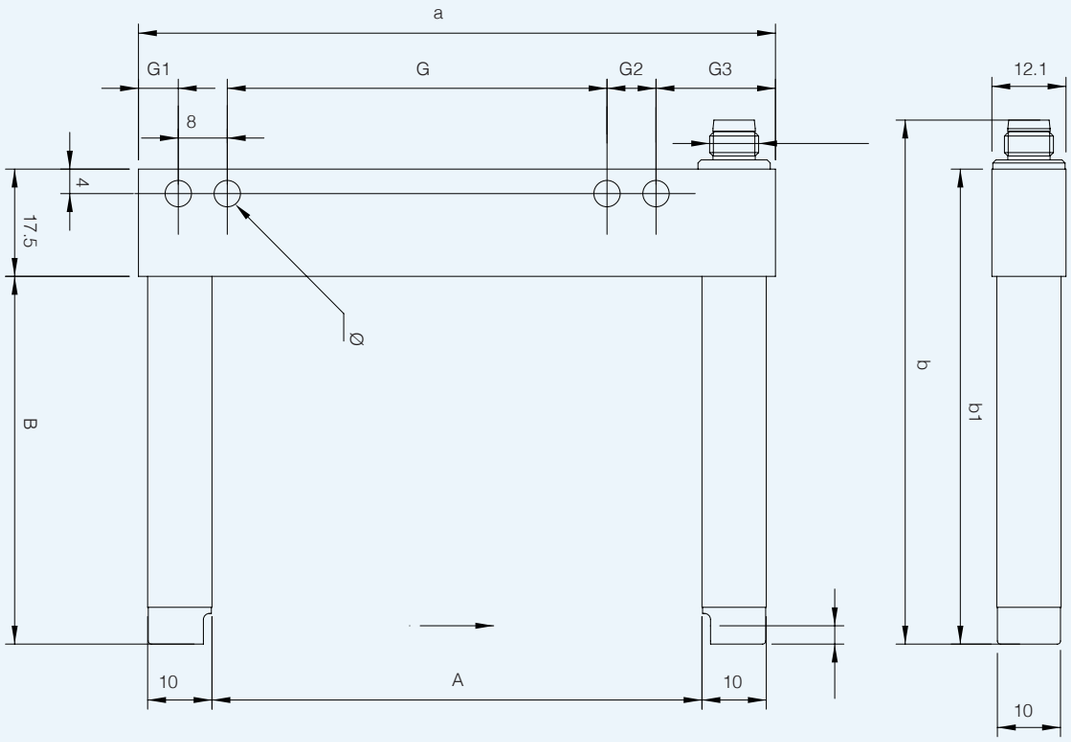

models	A (width slit detection)	B (depth slit detection)	a	b	b1	G	G1	G2	G3	Ø
FC5R/**-0506-IF	50	60	74	85.7	77.5	40	6.5	19.5	8 x 19.5	4 x 4,3
FC5R/**-0806-1F	80	60	104	85.7	77.5	70	6.5	19.5	8 x 19.5	4 x 4.3
FC5R/**-1212-1F	120	124.3	144	150.2	142	100	17	17	8 x 17	4 x 4.3

notes

FC6 series

Photoelectric fork for objects detection with regulation

features

- Simple and accurate adjustment manually by -/+ buttons
- Infrared emission; LASER emission class 1
- Metal housing
- Light/Dark switching, selectable by button
- Minimum size object detection 0,2 mm (FC6I) and 0,05 mm (FC6L)
- -20…+60 °C temperature range
- M8 connectors (4pins): PNP/NPN, LO/DO
- Switching frequency 10 kHz

web contents

- Application notes
- Photos
- Catalogue / Manuals

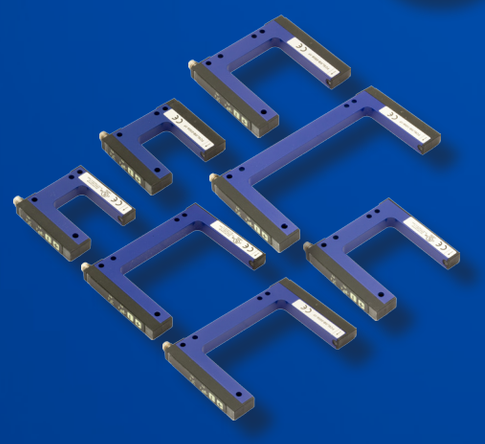

code description

FC6 L / 0 B - 03 04 - 1 F

series	FC6	Fork for objects
emission	L	LASER emission (670 nm)
	I	LED Infrared emission
output	0	State (LO/DO) selectable
output	B	Digital output (NPN/PNP)
width slit detection	03	Width slit detection 30 mm
	05	Width slit detection 50 mm
	08	Width slit detection 80 mm
	12	Width slit detection 120 mm
depth	04	Depth slit detection 42 mm
	06	Depth slit detection 59 mm
housing	1	Metal housing - Aluminum
plug	F	Plug M8 4 pin

available models

supply	installation	width (mm)	depth (mm)	FC6I, NPN - PNP, LO/DO selectable	FC6L, NPN - PNP, LO/DO selectable
12...24 Vdc	M8 4 pins	30	42 mm	FC6I/0B-0304-1F	FC6L/0B-0304-1F
		50	59 mm	FC6I/0B-0506-1F	FC6L/0B-0506-1F
		80		FC6I/0B-0806-1F	FC6L/0B-0806-1F
		120		FC6I/0B-1206-1F	FC6L/0B-1206-1F

technical specification

	FC6L/**-**-**	FC6I/**-**-**
nominal sensing distance	30...120 mm	
minimum detectable object	0.05 mm	0.2 mm
emission	red LASER 670 nm, modulated, class 1	infrared LED, modulated
external ligth interference	10,000 lux (5,000 lux incandescent lamp)	
operating voltage	12 … 24 Vdc (with protection against reverse polarity)	
max ripple content	10%	
no-load supply current	40 mA	
load current	100 mA	
output voltage drop	≤ 2 V @ IL = 100 mA	
switching frequency	10 kHz	
power supply protections	inverse-polarity protected short-circuit output protected	
temperature range	- 20 ...+ 50 °C	- 20 ...+ 60 °C
storage temperature	- 30 ...+ 80 °C	
protection degree	IP65 (EN60529)	
housing material	painted aluminium and polyamide/glass	
plug	M8 4 pin	
weight (approximate)	55...128 g	

electrical diagrams of the connections

PNP/NPN selectable output

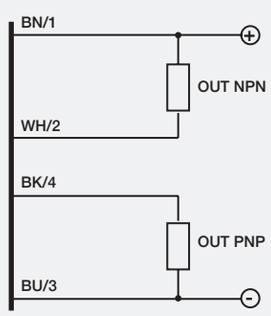

BN	brown
BU	blue
BK	black
WH	white
PK	pink
GY	gray

plug

M8 FC6L/-**-** FC6I/**-**-****

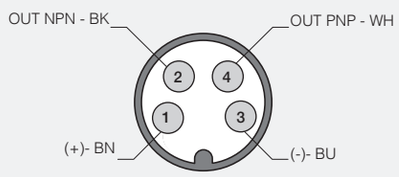

dimensions (mm)

FC6I/-03**-1F**

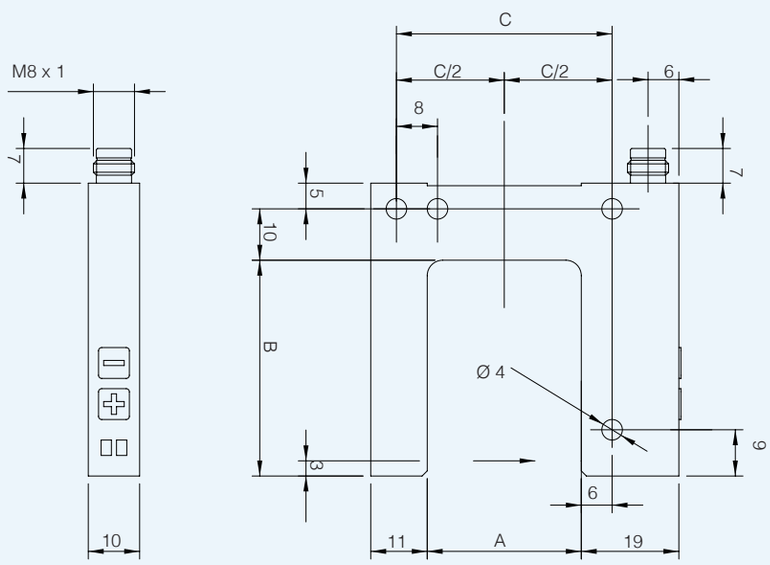

models	A width (mm)	B depth (mm)	C
FC6*/**-03*-**	30	42	42
FC6*/**-05*-**	50		40
FC6*/**-08*-**	80	59	70
FC6*/**-12*-**	120		110

dimensions (mm)

FC6L/**-03**-1F

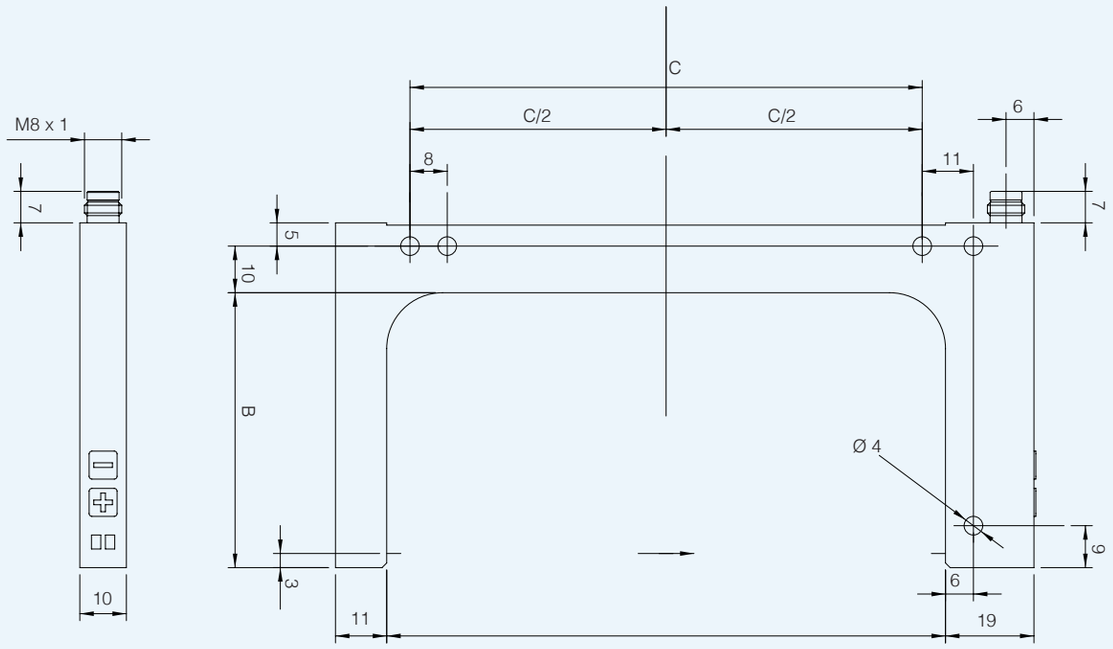

FC6L/030-**

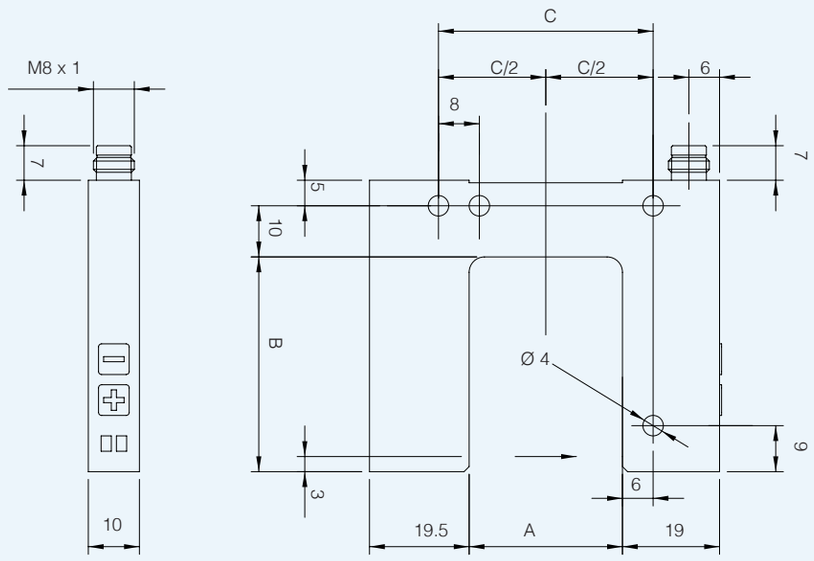

FC6L/**-1F

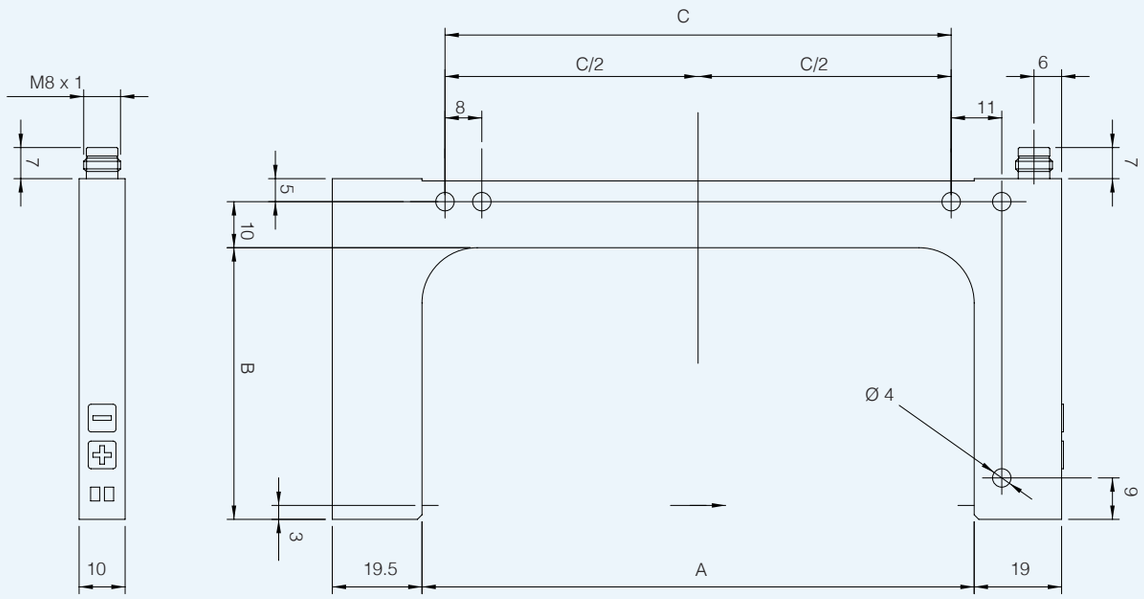

models	A width (mm)	B depth (mm)	C
FC6*/**-03*-**	30	42	42
FC6*/**-05*-**	50	59	40
FC6*/**-08*-**	80		70
FC6*/**-12*-**	120		110

notes

FC7 series

Photoelectric fork sensors
for labels detection

features

- **Dinamic Teach-in or control panel and manual adjustment with "+/-" buttons**
- **Minimum object detection 2 mm (gap between labels), 2 mm (label size)**
- **Infrared emission**
- **Light/Dark switching, selectable by button**
- **Switching frequency 10 kHz**
- **M8 connectors (4 pins): PNP or NPN, LO/DO selectable**
- **-20 ...+60 °C temperature range**

web contents

- **Application notes**
- **Photos**
- **Catalogue / Manuals**

code description

FC7 I / 0 P - M3 04 - 0 F

series	FC7	Fork for labels
emission	I	LED Infrared emission
output	0	LO/DO output selectable, remote teach
PNP / NPN output	P	PNP digital output
	N	NPN digital output
	B	NPN / PNP digital output
width	M3	Width slit detection 3 mm
depth	04	Depth slit detection 42 mm
housing	0	Thermoplastic case
plug	F	M8 plug 4 pin

available models

supply	installation	PNP	NPN	NPN / PNP
12...24 Vdc	M8 4 pins	FC7I/0P-M304-0F	FC7I/0N-M304-0F	FC7I/0B-M304-0F

technical specification

	FC7I/**-**-**
nominal sensing distance	3 mm
minimum lenght of label	2 mm
minimum distance between 2 labels	2 mm
slot depth detection	42 mm
slot width detection	3 mm
emission	infrared
maximum flow rate	200 m/min
detection accurancy	+/- 50 µm at 150 m/min
operating voltage	12 … 24 Vdc (with protection against reverse polarity)
max ripple content	10%
no-load supply current	35 mA
load current	100 mA
output voltage drop	≤ 2 V @ IL = 100 mA
switching frequency	10 kHz
power on delay	50 us max
power supply protections	polarity reversal, transient
temperature range	- 20 ...+ 60 °C
storage temperature	- 30 ...+ 80 °C
protection degree	IP65, IEC (EN60529)
housing material	PA
plug	M8 4 pins
weight (approximate)	35 g

electrical diagrams of the connections

PNP	NPN	NPN / PNP

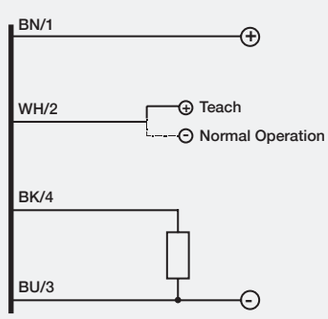

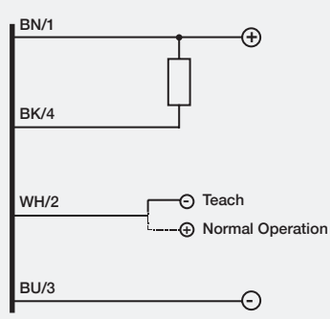

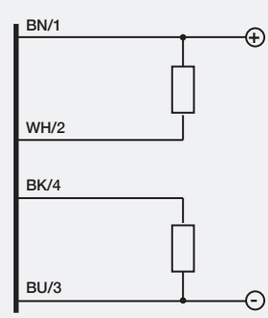

BN	brown
BU	blue
BK	black
WH	withe
PK	pink
GY	gray

plug

M8 FC7/**-**-**	M8 FC7/0B-**-**
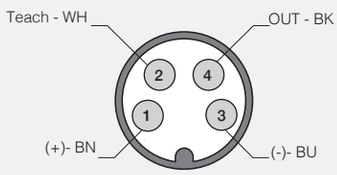	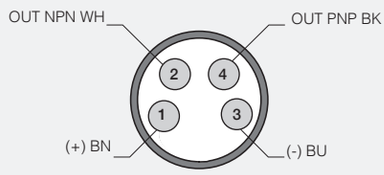

dimensions (mm)

FC7I/**-**-**

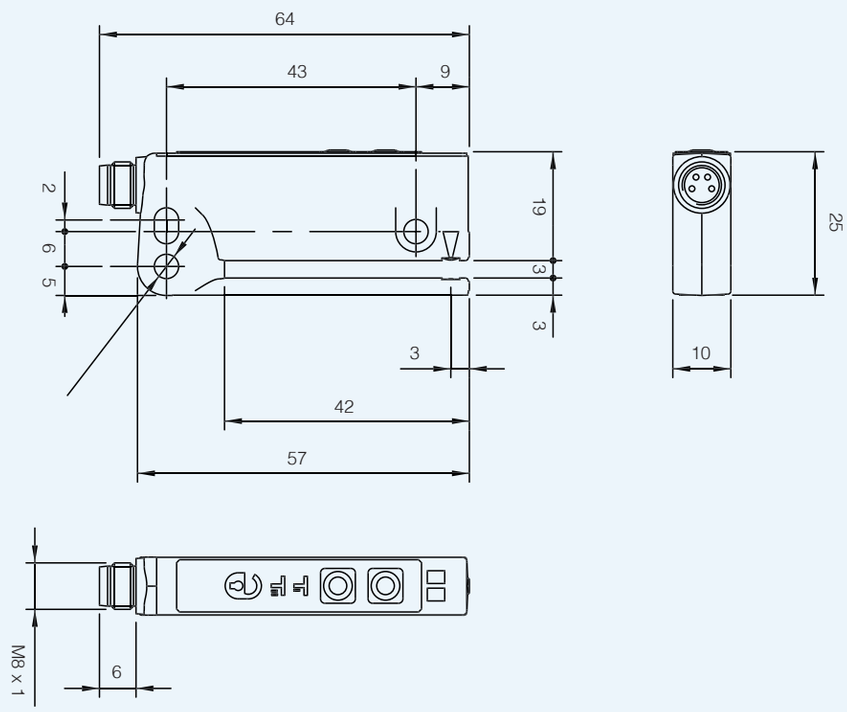

notes

FC8 series

Ultrasonic fork sensors for labels detection

features

- **Ultrasonic fork sensor for transparent labels, any opaque material with connector M8 4-pole**
- **Teach-in models with dynamic and remote teach**
- **Ultrasonic technology**
- **Small size easy to locate; aluminum case**
- **NPN and PNP, LO/DO total configurable**
- **Width slit detection 3 mm; depth slit detection 69 mm**
- **Maximum switching frequency 1.500 Hz**

web contents

- **Application notes**
- **Photos**
- **Catalogue / Manuals**

code description

FC8 U / 0 P - M3 07 - 1 F

series	FC8	Ultrasonic fork for labels
technology	U	Ultrasonic
output	0	LO/DO output selectable, remote teach
PNP / NPN output	P	PNP digital output
	N	NPN digital output
width	M3	Width slit detection 3 mm
depth	07	Depth slit detection 69 mm
housing	1	Metal housing - aluminium
plug	F	M8 plug 4 pin

available models

supply	installation	PNP	NPN	NPN / PNP
12...24 Vdc	M8 4 pins	FC8U/0P-M307-1F	FC8U/0N-M307-1F	FC8U/0B-M307-1F

technical specification

	FC8U/0*-M307-1F
nominal sensing distance	3 mm
minimum length of label	2 mm
minimum distance between 2 labels	2 mm
slot depth detection	69 mm
slot lenght detection	-
emission	ultrasonic
maximum flow rate	180 m/min
detection accurancy	+/- 0,20 µm at 120 m/min
operating voltage	12 … 24 Vdc (with protection against reverse polarity)
max ripple content	10%
no-load supply current	45 mA
load current	100 mA
output voltage drop	≤ 2 V @ IL = 100 mA
switching frequency	1.500 kHz
power on delay	300 us
power supply protections	short-circuit output protected interference suppression
temperature range	+ 5 ...+55 °C
storage temperature	- 20 ...+70 °C
protection degree	IP65, IEC (EN60529)
housing material	painted aluminium
plug	M8 4 pins
weight (approximate)	160 g

electrical diagrams of the connections

PNP	NPN	NPN / PNP

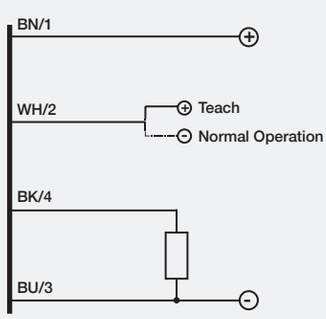

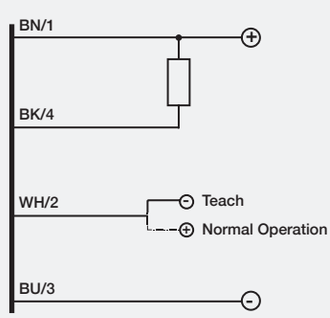

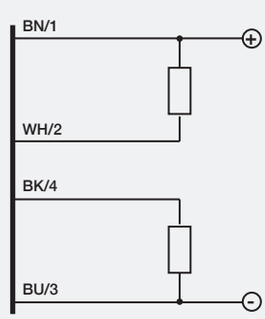

BN	brown
BU	blue
BK	black
WH	withe
PK	pink
GY	gray

plug

M8 FC8/**-**-**	M8 FC8/0B-**-**
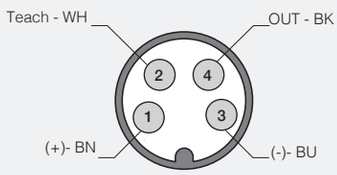	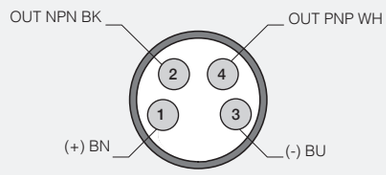

dimensions (mm)

FC8U/**-**-**

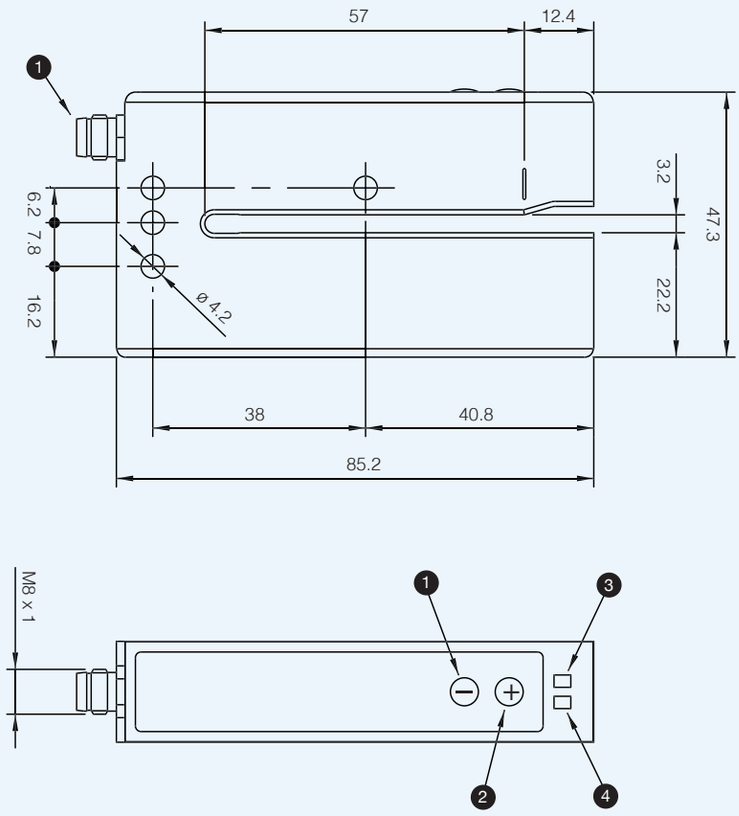

1. button -
2. button +
3. yellow LED, “ON” when the outputs are set to 1 (run)
4. red LED: keyboard lock and regulation

notes

Fibre optic amplifers

SSF series

M18 photoelectric sensors
for optical fibres

features

- **Models with sensitivity adjustment by teach-in button**
- **With range of optical fibres are available**
- **LED status indicator for all versions**
- **Complete protection against electrical damages**
- **Approvals: CE and cULus listed**

web contents

- **Application notes**
- **Photos**
- **Catalogue / Manuals**

code description

SS F / 0 N - 0 A

series	SS	M18 photoelectric sensor
function	F	For optical fibre
LO / DO	0	Selectable LO/DO
NPN / PNP output	N	NPN output
	P	PNP output
housing	0	Plastic housing
	1	Metal housing
cable / plug output	A	Axial cable exit 2 m
	E	M12 plug cable exit

available models

dimensions	housing	adjustment	plug	PNP	NPN
				NO / NC	NO / NC
M18	plastic	Teach-In	cable	SSF/0P-0A	SSF/0N-0A
			M12	SSF/0P-0E	SSF/0N-0E
	metallic		cable	SSF/0P-1A	SSF/0N-1A
			M12	SSF/0P-1E	SSF/0N-1E

technical specification

	SSF/0*-**
nominal sensing distance	depending on optical fibres
emission	red (660 nm)
tolerance	+ 15 %...- 5 %
differential travel	≤ 10 %
repeat accuracy	5 %
operating voltage	10...30 Vdc
ripple	≤ 10 %
load current	100 mA
no-load current	≤ 20 mA
leakage current	≤ 10 µA
output voltage drop	2 V max
output type	NPN or PNP - LO / DO selectable
switching frequency	800 Hz
power on delay	150 ms
power supply protections	polarity reversal, transient
output electrical protections	short circuit (autoreset)
temperature range	- 25°C...+ 70°C (without freeze)
temperature drift	10 % Sr
external ligth interference	3,000 lux (incandescent lamp) 10,000 lux (sunlight)
protection degree	IP67 (EN60529) [1]
LEDs	yellow
sensitivity adjustment	Teach-In
housing material	PBT (plastic), nickel-plated brass (metal)
optic material	depending on optical fibres
tightening torque	1 Nm (plastic housing), 25 Nm (metallic housing)
weight (approximate)	plastic version: 30 g connector / 100 g cable metallic version: 70 g connector / 130 g cable

[1] Protection guaranteed only with plug cable well mounted

electrical diagrams of the connections

NPN

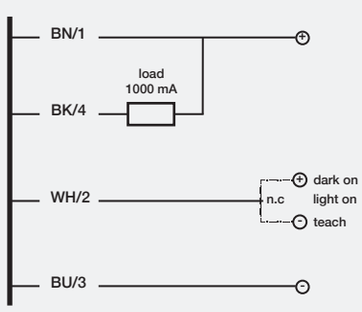

PNP

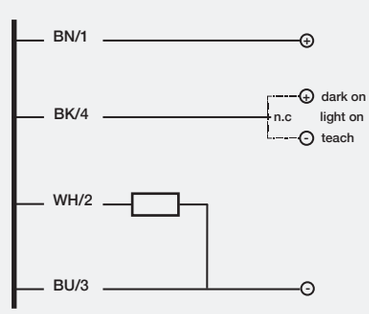

BN	brown
BU	blue
BK	black
WH	withe
PK	pink
GY	gray

In case bothe dark on and remote teach in functions are necessary connect a pull up resistor of 2,2 kΩ between Wh/2 and Bn/1.

plug

M12

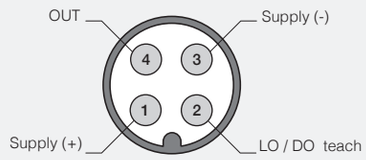

dimensions (mm)

SSF/0*-*A

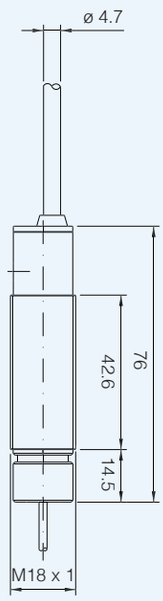

SSF/0*-*E

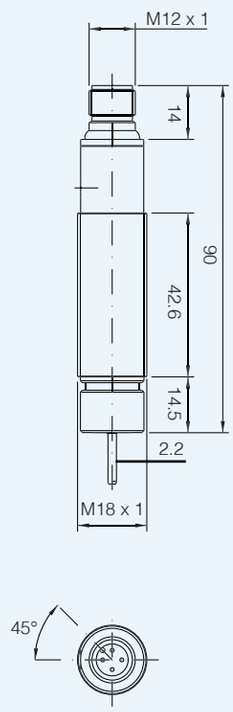

dimensions (mm)

accessories included in all plastic models

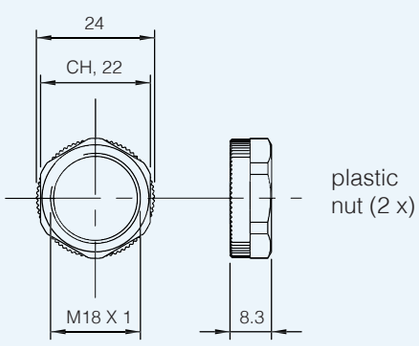

dimensions (mm)

accessories included in all metallic models

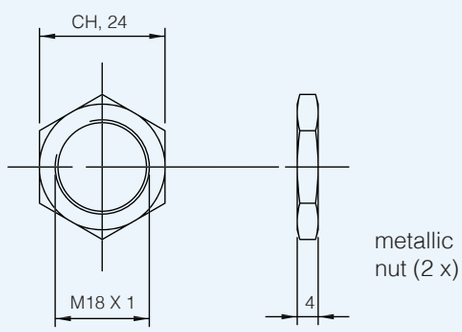

notes

FS1 series

Cubic amplifier
unit for optical fibres - DC

features

- **Extremely reduced dimensions amplifier units (only 49 x 26 x15 mm)**
- **Right angle cable exit or M12 plug cable for reducing the overall dimensions at minimum**
- **Trimmer for sensivity adjustment**
- **NPN or PNP outputs with selectable NO/NC**
- **Red light beam with visible spot**
- **Wide range of optical fibres (plastics and glass)**
- **Complete protection against electrical damage**
- **Fixing with M4 screws (2xM4, 20 mm step)**

web contents

- **Application notes**
- **Photos**
- **Catalogue / Manuals**

code description

FS1 / 0 N - C

series	FS1	Amplifer unit for optical fibres
type	0	NO/NC output selectable
NPN / PNP output	N	NPN output
	P	PNP output
cable / plug output	C	90° cable exit 2 m
	E	90° M12 plug exit

available models

dimensions (mm)	series	DIN rail	adjustment	exit	PNP	NPN
					NO / NC	NO / NC
15 x 26 x 67	FS1	-	trimmer	cable	FS1/0P-C	FS1/0N-C
				M12	FS1/0P-E	FS1/0N-E

technical specification

	FS1/0*-*
sensing distance	see optical fibres table
emission	red (660 nm)
operating voltage	10...30 Vdc
ripple	≤ 10 %
no-load supply current	100 mA
load current	30 mA
voltage drop	1.2 V max
output type	NPN or PNP - NO / NC selectable
switching frequency	1 kHz
power on delay	200 ms
power supply protections	polarity reversal, transient
output electrical protections	short circuit (autoreset)
sensitivity adjustment	1 turn trimmer
temperature range	- 25°C...+ 70°C (without freeze)
external ligth interference	3,000 lux (incandescent lamp) 10,000 lux (sunlight)
protection degree	IP65 (EN60529) [1]
LEDs	red (output NO energized)
housing material	Polyammide
optic material	depending by optical fibres
weight (approximate)	50 g connector / 120 g cable (20 g mount bracket)

[1] Protection guaranteed only with plug cable well mounted.

electrical diagrams of the connections

NPN	PNP
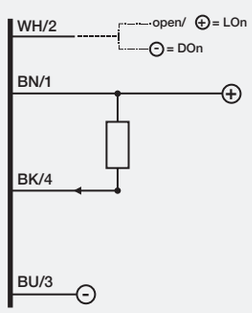	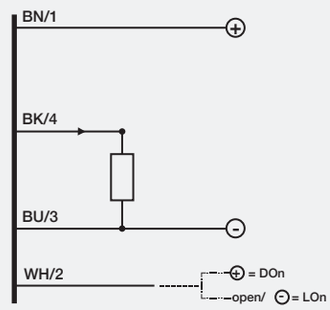

BN	brown
BU	blue
BK	black
WH	withe
PK	pink
GY	gray

Maximum admissible capacity C=0,2μF, for maximum output voltage and current.
IndicationsNO and NC are referred to the diffuse reflection optical fibres (on target absence).
For retro-reflective and through-beam models the indication NO to be replaced by NC and NC becomes NO.

plug

M12

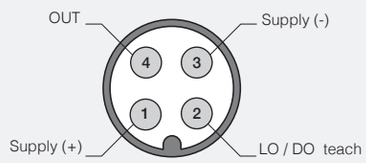

dimensions (mm)

FS1/0*-C

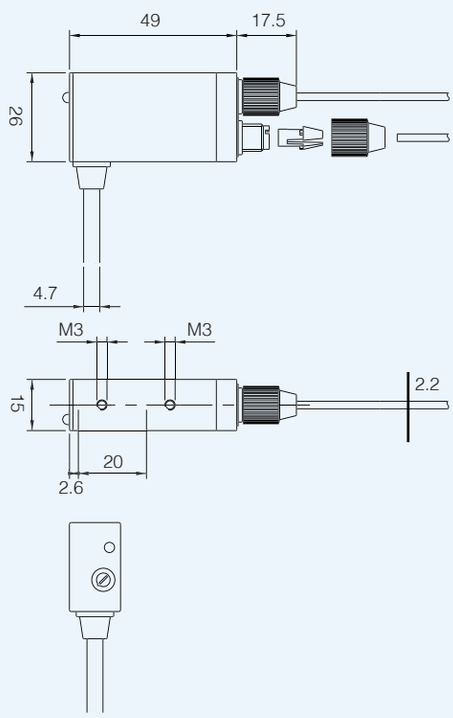

FS1/0*-E

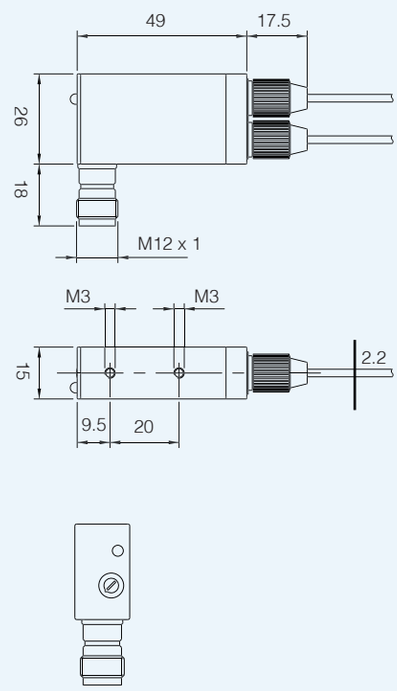

notes

F series
Photoelectric sensors
for DIN-rail mounting

features

- **Models with trimmer sensitivity**
- **Models with Teach-In**
- **Double dgital display**
- **High switching frequency**
- **Approvals: CE**

web contents

- **Application notes**
- **Photos**
- **Catalogue / Manuals**

code description

F 1 R / 0 P - 0 A

series	F	Optical fibres amplifier
type	1	Standard model, trimmer sens. adj.
	2	High speed model, trimmer sens. ajd.
	6	Digital models double display
emission	R	Red emission
LO / DO output	0	LO/DO selectable output
PNP / NPN output	P	PNP output
	N	NPN output
housing	0	Plastic housing
cable exit	A	Cable exit 2 m

available models

output	adjustment	switching frequency	PNP output	NPN output
cable	trimmer	standard	F1R/0P-0A	F1R/0N-0A
		high speed	F2R/0P-0A	F2R/0N-0A
	Teach-In	standard	F6R/0P-0A	F6R/0N-0A

technical specification

	standard F1R/0*-0A	high speed F2R/0*-0A	digital F6R/0*-0A
			
nominal sensing distance	depending on fibre used 36 mm		
emission	red (680 nm)		red (650 nm)
diffential travel	≤15 %		
repeat accuracy	5 %		
operating voltage	12...24 Vdc		
ripple	≤10 %		
no-load supply current	< 35 mA		< 40 mA
load current	50 mA max		
leakage current	< 10 µA		
output voltage drop	1 V max		
output type	NPN or PNP - LO / DO selectable		
responce time	200 µs max	ON: 20 µs OFF: 30 µs	1ms
power on delay	≤ 200 ms		
power supply protections	polarity reversal		
output electrical protections	short circuit		
sensitivity adjustment	trimmer (8 giri)		Teach-In
operative Temperature range	-25...+55° C (without freeze)		
storage temperature	-30...+70° C (without freeze)		
EMC	in conformity with the EMC Directive according to EN 60947-5-2		
interference by external light	10.000 lux (incandescent lamp) 20.000 lux (sunlight)		
protection degree	IP50 (according to: IEC 60529)		
LEDs	orange (output active) green (n.4 - received signal level) red (no received signal)		orange (output active) 8 bits display (n.4 red: incidentsignal; n.4 green: threshold level)
housing material	PBT (housing); PC (cover)		
weight (approximate)	70 g (approx.)		

value tabel

The values shown in the following tables are measured, by using our CF/CB1 optical fibre, set to obtain an hysteresis of about 15% with all type of amplifier.

glass optical fibres CV series (mm)

F1 series		F2 series		F6 series		models
-	-	70	90	-	-	CV-CB1 CV-CB3
410	500	200	240	800	925	CV-RB4 CV-RB6

plastic optical fibres cf series (mm)

F1 series		F2 series		F6 series		models
ON 90 %	OFF 90 %	ON 90 %	OFF 90 %	ON 90 %	OFF 90 %	
0	0	0	0	0	0	CF/CA1
40	47	15	18	100	115	CF-CA2
						CF-CA4
100	130	60	68	300	350	CF-RA4
						CF-RA7
150	180	70	90	300	345	CF-CB1
						CF-CB3
410	500	200	240	800	925	CF-RB3
						CF-RB4
						CF-RB6
4,000	4,000	2,400	2,800	> 4.000 EX.G. = 12		CF-RB9
						CF-RBA
50	58	20	25	90	115	CF-CC1
350	400	190	220	600	690	CF-RC6
2,200	2,600	1,600	1,900	> 4,000 EG = 12		CF-RC9
						CF-RCA

accessories for CF series optical fibres (mm)

series F1	series F2	series F6	model fibres	models
Sn	Sn	Sn	CF-RB3-20	
400	200	800	CF-RB3-20	AF/ER9
1,500	1,000	3,000	CF-RBA-** CF-RCA-20	ST28

modular fibres for any application AF series (mm)

series F1	series F2	series F6	models
Sn	Sn	Sn	
1,500	700	3.000	AF/ER4
2,200	1,000	4,500	AF/ER5
4,500	2,000	6,000	AF/ER6
			AF/ER7

accessories for CV series optical fibres (mm)

series F1	series F2	series F6	models
Sn	Sn	Sn	
-	20	-	AF/FC1
	30		AF/FC2
3,000	2,000	6,000	AF/ER1
4,000	3,000	8,000	AF/ER2
10,000	8,000	14,000	AF/ER3

electrical diagrams of the connections

NPN	PNP
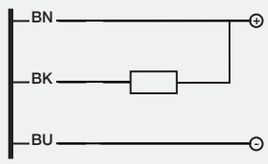	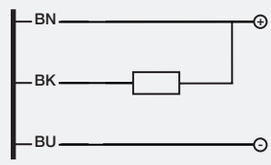

BN	brown
BU	blue
BK	black
WH	withe
PK	pink
GY	gray

dimensions (mm)

F1,F2	F6
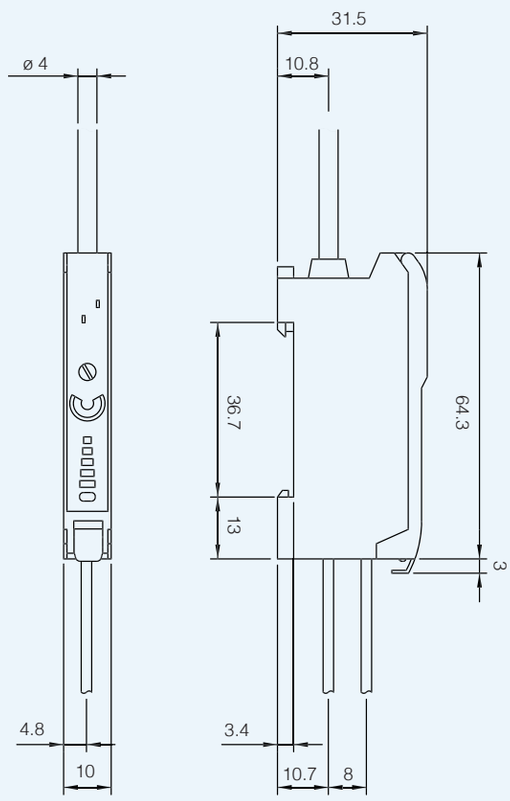	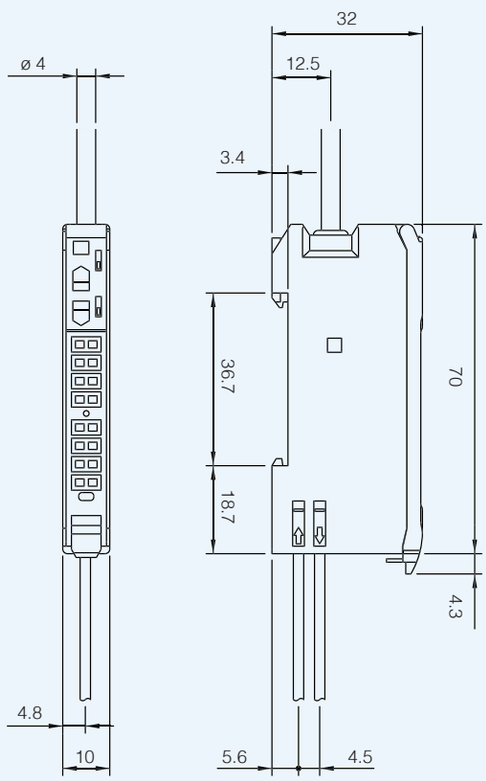

FX series

Photoelectric sensors
for DIN-rail mounting

features

- **Fibre-optic amplifier for DIN-rail mounting (DIN/EN 50022)**
- **Distance setting by means of teach in with additional manual fine adjustment (FX4)**
- **Distance setting by means of 12-turn potentiometer with illuminated scale (FX3)**
- **Adjustable pulse delay and stretching (FX4)**
- **High switching frequency: 1,5 kHz**
- **Ideal for stacking, thanks to 10 mm housing width**
- **Teach 1 (background), Teach 2 (target and background) (FX4)**
- **Large setting range of 20...200 mm**

web contents

- **Application notes**
- **Photos**
- **Catalogue / Manuals**

code description

FX 3 / 0 P - 0 A

series	FX	Fibre-optic amplifier
distance setting	3	Distance setting by means of potentiometer
	4	Distance setting by means of teach in buttons
LO / DO	0	LO/DO function selectable
PNP / NPN output	P	PNP output
	N	NPN output
housing	0	Plastic housing
cable / plug output	A	Cable output 2 m
	F	4 pin M8 connector

available models

dimensions (mm)	series	DIN rail	radjustment	exit	PNP	NPN
					NO / NC	NO / NC
10 x 31 x 60	FX3	•	trimmer	cable	FX3/0P-0A	FX3/0N-0A
				M8	FX3/0P-0F	FX3/0N-0F
	FX4		Teach-In	cable	FX4/0P-0A	FX4/0N-0A
				M8	FX4/0P-0F	FX4/0N-0F

technical specification

	FX4/0*-0*	FX3/0*-0*
		
nominal sensing distance	see optical fibres table	
setting range	20...200 mm	
teach increment	≤ 1 mm	-
hysteresis	10 % typ.	
standard target	100 x 100 mm white	
emitter (regulated light power)	red (660 nm)	
output (switchable)	NO / NC	
excess light output	-	light ON
output state indication	LEDs; bar graph	LED yellow
excess light indicator	LED green	
supply voltage range	10 ... 30 Vdc	
max. ripple content	≤ 20% V al / UB	
output current	≤200 mA	
output voltage drop	≤ 2.0 V a / at 200 mA	
no-load supply current	µ25 mA typ. a / at UB = 24 V	≤ 15 mA typ. a / at UB = 24 V
leakage current	≤ 0.1 mA	
switching frequency	≤ 1,500 Hz	
switching time	≤ 330 µsec	
modulation frequency	15 kHz	
power on delay	80 ms	300 ms
max. ambient light, halogen	5,000 Lux	
max. ambient light, sun	10,000 Lux	
sensitivity setting	Teach-In	Potentiometer
pulse delay/stretching	10 ... 150 msec	-
ambient temperature range	-25 ... +55 °C	
temperature drift of sn	0.2 % / °C	
voltage reversal protection	built-in	
induction protection		
short-circuit protection		
shocks and vibration	IEC 60947-5-2 / 7.4	
cable length	300 m max.	
weight	17 g connector / 68 g cable	18 g connector/ 69 g cable
protection degree	IP64 (EN60529) [1]	
EMC	in conformity with the EMC Directive according to EN 60947-5-2	
optical fibre connection	Ø 2,2 mm	
housing material	PBTP	
connection cable (FX*/0*-0A)	PVC 4 x 0,25 mm^2/ 128 x 0,05 mm Ø	
connector type (FX*/0*-0F)	M8 4 wires	

[1] Protection guaranteed only with plug cable well mounted

electrical diagrams of the connections

FX3/0*-0* NPN output

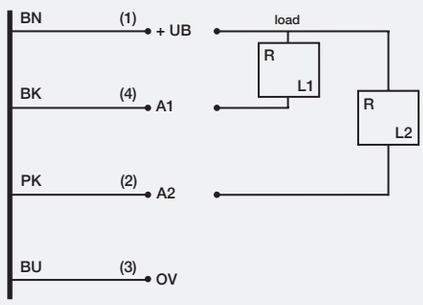

FX3/0*-0* PNP output

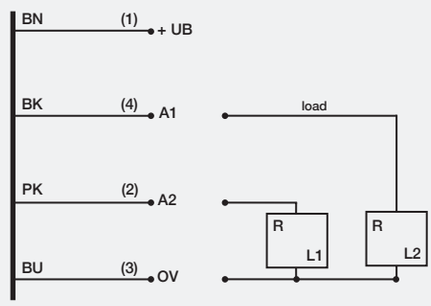

A1 Output (Light-ON/Dark-ON switchable)
A2 Excess light output Light-ON

FX4/0*-0* NPN output

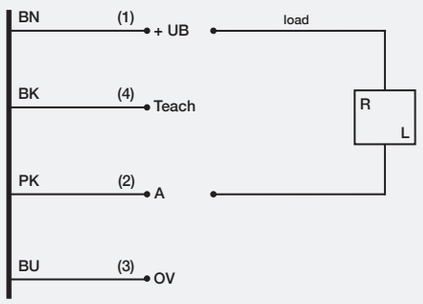

FX4/0*-0* PNP output

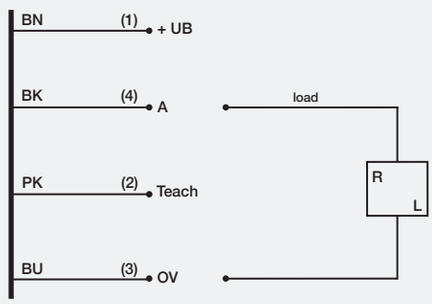

BN	brown
BU	blue
BK	black
WH	withe
PK	pink
GY	gray

plug

M8

dimensions (mm)

FX3/0*-0A

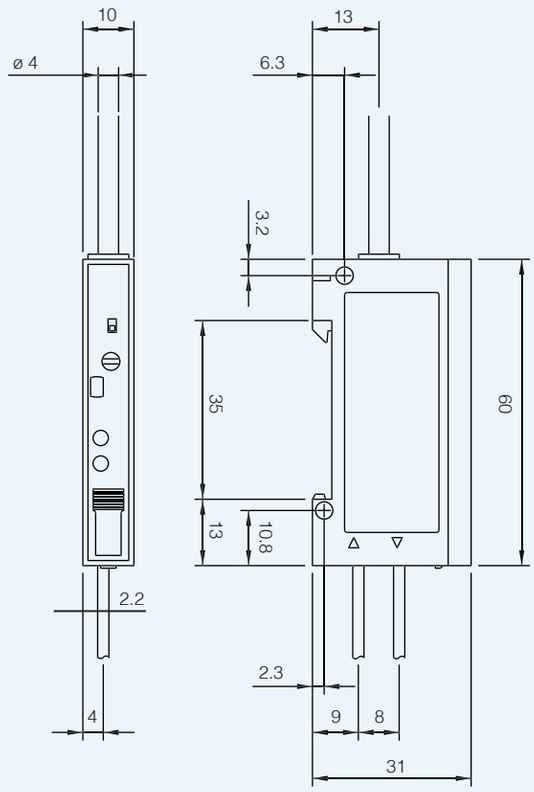

FX3/0*-0F

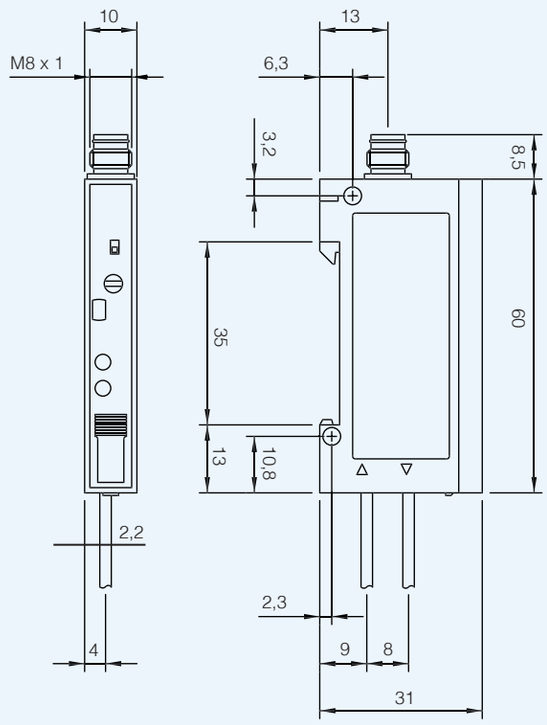

FX4/0*-0A

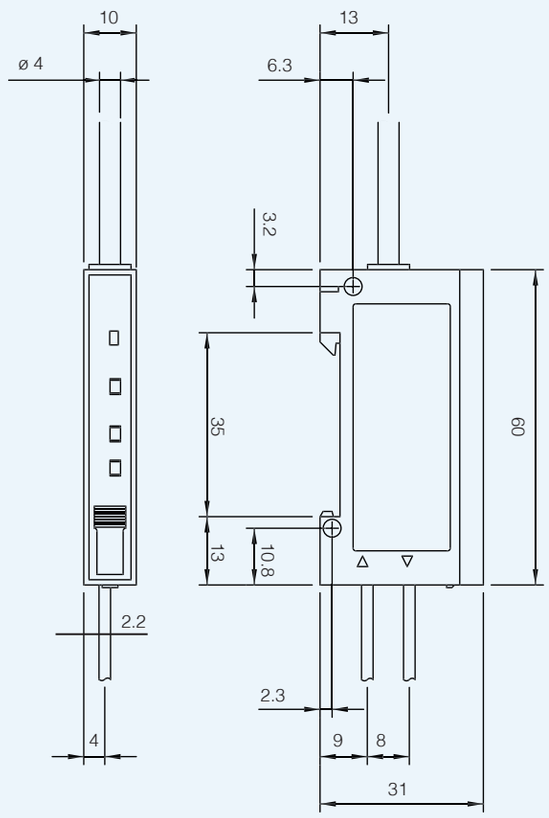

FX4/0*-0F

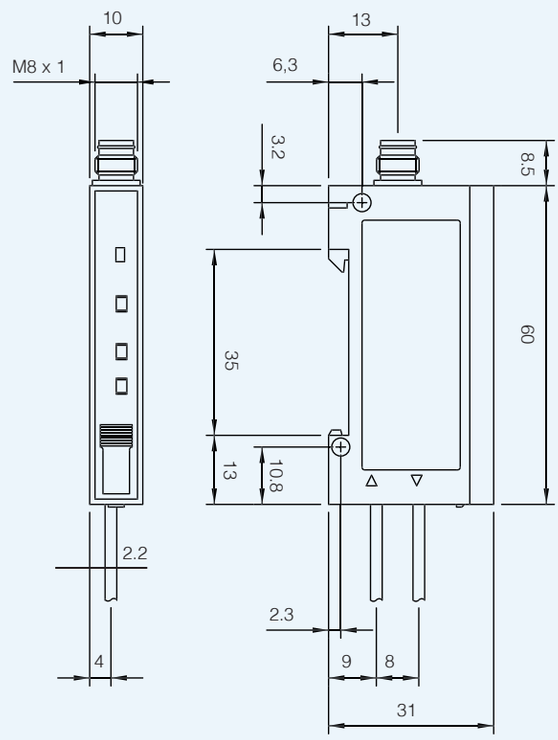

Optical fibres

CF series
Plastic optical fibres

features

- **Wide range of models: ultra slim for small object, long distances, spiral tube for handling**
- **Wide range of flexible fibre heads (with sleeve)**
- **Wide range of cutting fibre units**
- **P67 protection degree**
- **SSF – FS1 – FX3 – FX4 series connectable**
- **Approvals: CE**

web contents

- **Application notes**
- **Photos**
- **Catalogue / Manuals**

ordering system

models[1]	SSF (EX.G.=1)	FS1 (EX.G.=1)	FX3 (EX.G.=1)	FX4 (EX.G.=1)	F1R	F2R	F6R	type	Ø optical fibre core	free-cut	length [2]	head shape	lenses
CF/CA1-20	60 mm	60 mm	140 mm	140 mm	-	-	-	scanner	0.5	●	2 m	M5	●
CF/CA2-**	15 mm	15 mm	70 mm	110 mm	40 mm	15 mm	100 mm	scanner	0.5	-	0.5...1 m	M4	-
CF/CA4-**			60 mm	80 mm								M4 + sleeve	
CF/RA4-**	30 mm	30 mm	150 mm	250 mm	100 mm	60 mm	300 mm	P/R					
CF/RA7-**												M3	
CF/CB1-**	50 mm	50 mm	200 mm	300 mm	150 mm	70 mm		scanner	1	●	1...2 m	M6	
CF/CB3-**												M6 + sleeve	
CF/CB3-**	120 mm	120 mm	700 mm	700 mm	410 mm	200 mm		P/R			2 m	M4	
CF/RB3-20			600 mm	900 mm			800 mm				1...2 m	M4 + sleeve	
CF/RB4-**												M4	
CF/RB6-**	1,200 mm	1,200 mm	8,000 mm	10,000 mm	4,000 mm	2,400 mm	> 4,000 EG = 2					Ø 6 mm	
CF/RB9-**												M7	
CF/RBA-**	15 mm	15 mm	70 mm	100 mm	50 mm	20 mm	90 mm	scanner		-	2 m	M6	●
CF/CC1-20	100 mm	100 mm	500 mm	500 mm	350 mm	190 mm	600 mm	P/R				M4	-
CF/RC6-20	1,000 mm	1,000 mm	6,000 mm	8,000 mm	2,200 mm	1,600 mm	> 4,000 EG = 2					Ø 6 mm	●
CF/RC9-20												M7	
CF/RCA-20													

[1] The last two bits of the code show the fibre length (in dm) [2] Standard length
Special lengths are available on request.

diffuse reflection with narrow beam CF/CA1-20 model

product	main features	
	Ø optical fibre core	0.5 mm
	distance (with SSF)	60 mm
	distance (with FS1)	60 mm
	distance (with FX3)	140 mm
	distance (with FX4)	140 mm
	distance (with F1R)	-
	distance (with F2R)	-
	distance (with F6R)	-
	fibre length (L)	2 m
	free-cut	●
	head shape	M5
	protection degree	IP67 (EN60529)
	temperature range	-25°C....+70°C
	optical fibre materials	PE, plastic
	head materials	INOX
	accessories available	AF/1A2

dimensions (mm)

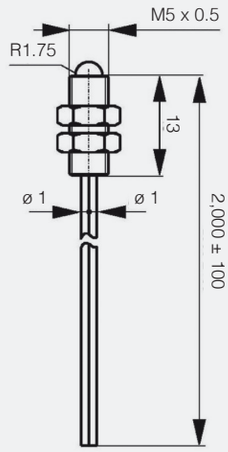

diffuse reflection CF/CA2-** model

product	main features	
	Ø optical fibre core	0.5 mm
	distance (with SSF)	15 mm
	distance (with FS1)	15 mm
	distance (with FX3)	70 mm
	distance (with FX4)	110 mm
	distance (with F1R)	40 mm
	distance (with F2R)	15 mm
	distance (with F6R)	100 mm
	fibre length (L)	0,5...1 m
	free-cut	-
	head shape	M4
	protection degree	IP67 (EN60529)
	temperature range	-40°C....+70°C
	optical fibre materials	PE, plastic
	head materials	nickel-plated brass
	accessories available	AF/1A2

dimensions (mm)

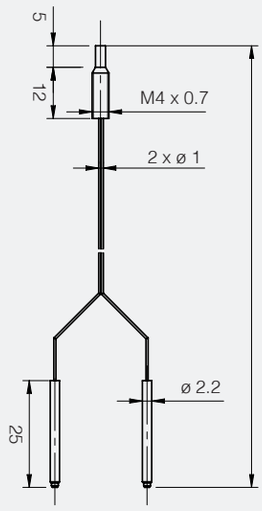

diffuse reflection with sleeve CF/CA4-** model

product	main features	
	Ø optical fibre core	0.5 mm
	distance (with SSF)	15 mm
	distance (with FS1)	15 mm
	distance (with FX3)	60 mm
	distance (with FX4)	80 mm
	distance (with F1R)	40 mm
	distance (with F2R)	15 mm
	distance (with F6R)	100 mm
	fibre length (L)	0.5...1 m
	free-cut	-
	head shape	M4 with sleeve
	protection degree	IP67 (EN60529)
	temperature range	-40°C....+55°C
	optical fibre materials	PE, plastic
	head materials	nickel-plated brass
	accessories available	AF/1A2

dimensions (mm)

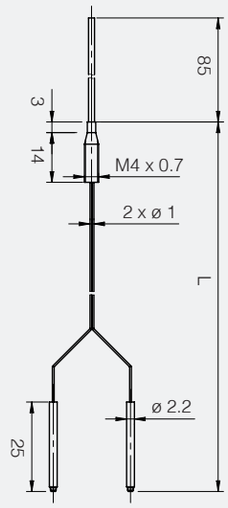

through-beam with sleeve CF/RA4-** model

product	main features	
	Ø optical fibre core	0.5 mm
	distance (with SSF)	30 mm
	distance (with FS1)	30 mm
	distance (with FX3)	150 mm
	distance (with FX4)	250 mm
	distance (with F1R)	100 mm
	distance (with F2R)	60 mm
	distance (with F6R)	300 mm
	fibre length (L)	0.5...1 m
	free-cut	-
	head shape	M4 with sleeve
	protection degree	IP67 (EN60529)
	temperature range	40°C....+55°C
	optical fibre materials	PE, plastic
	head materials	nickel-plated brass
	accessories available	AF/1A2

dimensions (mm)

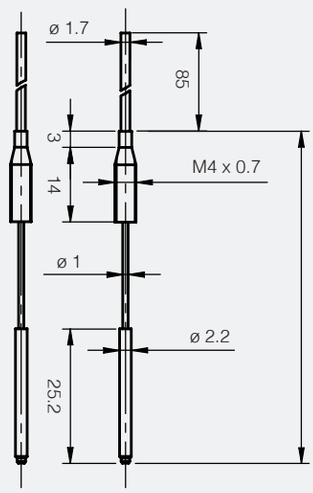

through-beam CF/RA7-** model

product	main features	
	Ø optical fibre core	0.5 mm
	distance (with SSF)	30 mm
	distance (with FS1)	30 mm
	distance (with FX3)	150 mm
	distance (with FX4)	250 mm
	distance (with F1R)	100 mm
	distance (with F2R)	60 mm
	distance (with F6R)	300 mm
	fibre length (L)	0.5...1 m
	free-cut	-
	head shape	M3
	protection degree	IP67 (EN60529)
	temperature range	-40°C....+70°C
	optical fibre materials	PE, plastic
	head materials	nickel-plated brass
	accessories available	AF/1A2

dimensions (mm)

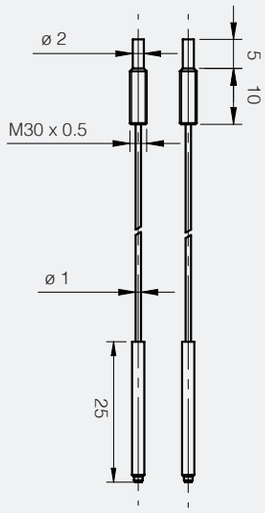

diffuse reflection CF/CB1-** model

product	main features	
	Ø optical fibre core	1 mm
	distance (with SSF)	50 mm
	distance (with FS1)	50 mm
	distance (with FX3)	200 mm
	distance (with FX4)	300 mm
	distance (with F1R)	150 mm
	distance (with F2R)	70 mm
	distance (with F6R)	300 mm
	fibre length (L)	1...2 m
	free-cut	●
	head shape	M6
	protection degree	IP67 (EN60529)
	temperature range	-40°C....+70°C
	optical fibre materials	PE, plastic
	head materials	nickel-plated brass
	accessories available	-

dimensions (mm)

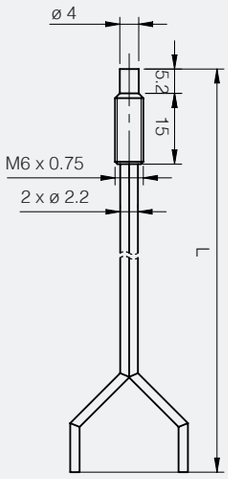

diffuse reflection with sleeve CF/CB3-** model

product	main features	
	Ø optical fibre core	1 mm
	distance (with SSF)	50 mm
	distance (with FS1)	50 mm
	distance (with FX3)	200 mm
	distance (with FX4)	300 mm
	distance (with F1R)	150 mm
	distance (with F2R)	70 mm
	distance (with F6R)	300 mm
	fibre length (L)	1...2 m
	free-cut	●
	head shape	M6 with sleeve
	protection degree	IP67 (EN60529)
	temperature range	-40°C....+55°C
	optical fibre materials	PE, plastic
	head materials	nickel-plated brass
	accessories available	-

dimensions (mm)

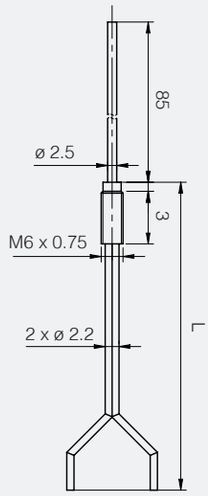

diffuse reflection with sleeve CF/RB3-20 model

product	main features	
	Ø optical fibre core	1 mm
	distance (with SSF)	120 mm
	distance (with FS1)	120 mm
	distance (with FX3)	700 mm
	distance (with FX4)	700 mm
	distance (with F1R)	150 mm
	distance (with F2R)	70 mm
	distance (with F6R)	300 mm
	fibre length (L)	2 m
	free-cut	-
	head shape	M4
	protection degree	IP67 (EN60529)
	temperature range	-40°C....+55°C
	optical fibre materials	PE, plastic
	head materials	nickel-plated brass
	accessories available	AF/ER9

dimensions (mm)

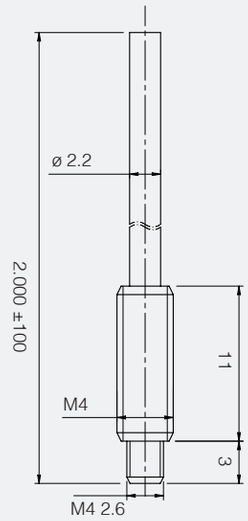

through-beam with sleeve CF/RB4-** model

product	main features	
	Ø optical fibre core	1 mm
	distance (with SSF)	120 mm
	distance (with FS1)	120 mm
	distance (with FX3)	600 mm
	distance (with FX4)	900 mm
	distance (with F1R)	410 mm
	distance (with F2R)	200 mm
	distance (with F6R)	800 mm
	fibre length (L)	1...2 m
	free-cut	●
	head shape	M4 with sleeve
	protection degree	IP67 (EN60529)
	temperature range	-40°C....+55°C
	optical fibre materials	PE, plastic
	head materials	nickel-plated brass
	accessories available	-

dimensions (mm)

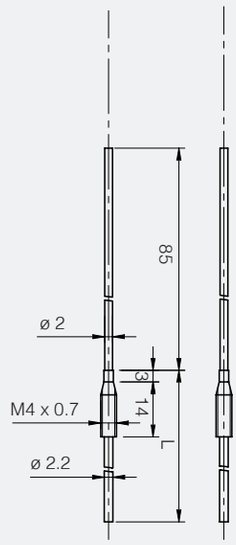

through-beam CF/RB6-** model

product	main features	
	Ø optical fibre core	1 mm
	distance (with SSF)	120 mm
	distance (with FS1)	120 mm
	distance (with FX3)	600 mm
	distance (with FX4)	900 mm
	distance (with F1R)	410 mm
	distance (with F2R)	200 mm
	distance (with F6R)	800 mm
	fibre length (L)	1...2 m
	free-cut	-
	head shape	M4
	protection degree	IP67 (EN60529)
	temperature range	-40°C....+70°C
	optical fibre materials	PE, plastic
	head materials	nickel-plated brass
	accessories available	-

dimensions (mm)

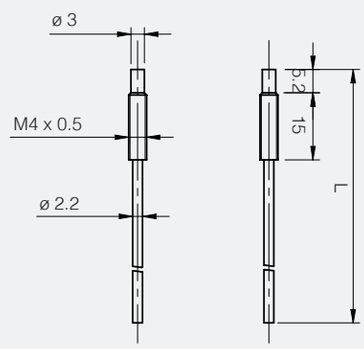

through-beam with lenses CF/RB9-** model

product	main features	
	Ø optical fibre core	1 mm
	distance (with SSF)	1,200 mm
	distance (with FS1)	1,200 mm
	distance (with FX3)	8,000 mm
	distance (with FX4)	10,000 mm
	distance (with F1R)	4,000 mm
	distance (with F2R)	2,400 mm
	distance (with F6R)	> 4,000 EX.G. = 12 mm
	fibre length (L)	1...2 m
	free-cut	●
	head shape	Ø 6 with lenses
	protection degree	IP67 (EN60529)
	temperature range	-40°C....+70°C
	optical fibre materials	PE, plastic
	head materials	nickel-plated brass
	accessories available	-

dimensions (mm)

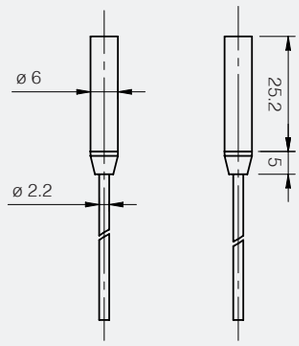

through-beam with lenses CF/RBA-** model

product	main features	
	Ø optical fibre core	1 mm
	distance (with SSF)	1,200 mm
	distance (with FS1)	1,200 mm
	distance (with FX3)	8,000 mm
	distance (with FX4)	10,000 mm
	distance (with F1R)	4,000 mm
	distance (with F2R)	2,400 mm
	distance (with F6R)	> 4,000 EX.G. = 12 mm
	fibre length (L)	1...2 m
	free-cut	●
	head shape	M7 ewith lenses
	protection degree	IP67 (EN60529)
	temperature range	-40°C....+70°C
	optical fibre materials	PE, plastic
	head materials	nickel-plated brass
	accessories available	ST 28

dimensions (mm)

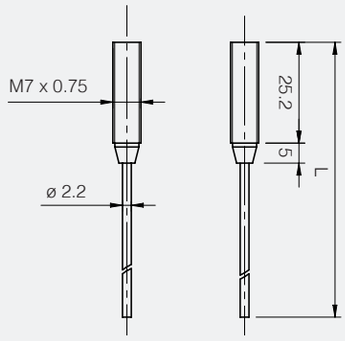

diffuse reflection CF/CC1-** model

product	main features	
	Ø optical fibre core	1 mm spiral tube
	distance (with SSF)	15 mm
	distance (with FS1)	15 mm
	distance (with FX3)	70 mm
	distance (with FX4)	100 mm
	distance (with F1R)	50 mm
	distance (with F2R)	20 mm
	distance (with F6R)	90 mm
	fibre length (L)	2 m
	free-cut	-
	head shape	M6
	protection degree	IP67 (EN60529)
	temperature range	-40°C....+70°C
	optical fibre materials	PE, plastic
	head materials	nickel-plated brass
	accessories available	-

dimensions (mm)

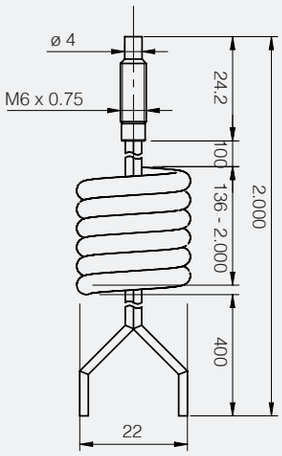

through-beam CF/RC6-** model

product	main features	
	Ø optical fibre core	1 mm spiral tube
	distance (with SSF)	100mm
	distance (with FS1)	100 mm
	distance (with FX3)	500 mm
	distance (with FX4)	500 mm
	distance (with F1R)	350 mm
	distance (with F2R)	190 mm
	distance (with F6R)	600 mm
	fibre length (L)	2 m
	free-cut	-
	head shape	M6
	protection degree	IP67 (EN60529)
	temperature range	-40°C....+70°C
	optical fibre materials	PE, plastic
	head materials	nickel-plated brass
	accessories available	-

dimensions (mm)

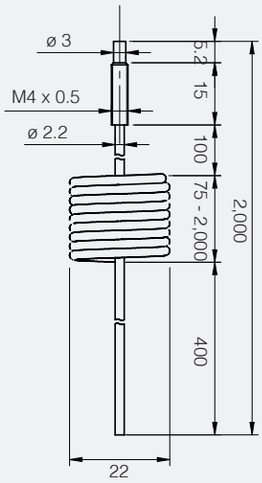

barriera con lenti modello CF/RC9-**

product	main features	
	Ø optical fibre core	1 mm spiral tube
	distance (with SSF)	1.000 mm
	distance (with FS1)	1.000 mm
	distance (with FX3)	6.000 mm
	distance (with FX4)	8.000 mm
	distance (with F1R)	2.200 mm
	distance (with F2R)	1.600 mm
	distance (with F6R)	> 4.000 EG = 2
	fibre length (L)	2 m
	free-cut	-
	head shape	Ø 6 with lenses
	protection degree	IP67 (EN60529)
	temperature range	-40°C....+70°C
	optical fibre materials	PE, plastic
	head materials	nickel-plated brass
	accessories available	-

dimensions (mm)

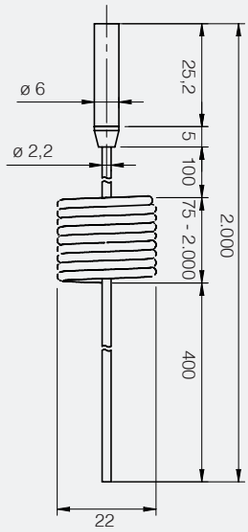

barriera con lenti modello CF/RCA-**

product	main features	
	Ø optical fibre core	1 mm spiral tube
	distance (with SSF)	1.000 mm
	distance (with FS1)	1.000 mm
	distance (with FX3)	6.000 mm
	distance (with FX4)	8.000 mm
	distance (with F1R)	2.200 mm
	distance (with F2R)	1.600 mm
	distance (with F6R)	> 4.000 mm EG = 2
	fibre length (L)	2 m
	free-cut	-
	head shape	Ø 7 with lenses
	protection degree	IP67 (EN60529)
	temperature range	-40°C....+70°C
	optical fibre materials	PE, plastic
	head materials	nickel-plated brass
	accessories available	ST 28

dimensions (mm)

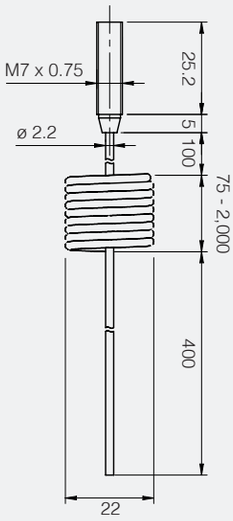

notes

AF series

Accessories for CF optical fibres

features

- **Wide range of collimator lenses**
- **IP67 protection degree**
- **SSF – FS1 – FX3 – FX4 series connectable**
- **90° optic deviator accessory**
- **Accessory adapter for fibre diameter from 1 to 2 mm**
- **Approvals: CE**

web contents

- **Application notes**
- **Photos**
- **Catalogue / Manuals**

ordering system

models	accessory type	type	SSF (EX.G.=1)	FS1 (EX.G.=1)	FX3 (EX.G.=1)	FX4 (EX.G.=1)	F1R	F2R	F6R	lenses	fibre model	∅ optical fibre core
AF/C	cutter	-	-	-	-	-	-	-	-	-	-	1
AF/1S	fibre to sell by metres											
AF/ER4	collimator lenses	P/R	600 mm	600 mm	2.000 mm	3,000 mm	1,500 mm	700 mm	3,000 mm	●	AF/1S	
AF/ER5			1,000 mm	1,000 mm	3,000 mm	5,000 mm	2,200 mm	1,000 mm	4,500 mm			
AF/ER6			3,500 mm	3,500 mm	6,000 mm	8,000 mm	4,500 mm	2,000 mm	6,000 mm			
AF/ER7			1,000 mm	1,000 mm								

cutter model AF/C

product	main features	dimensions (mm)
	Ø optical fibre core: 1 mm (plastic) NOTE: Before inserting the optical fibre into the fibre-head, cut it using the supplied cutter. In order to obtain the best perforances the accuracy of fibre-cutting is fundamental.	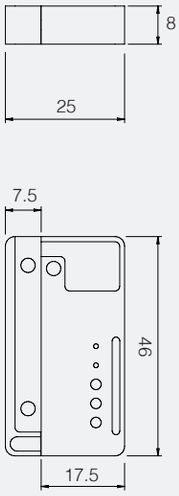

optical fibre AF/1S model

product	main features	dimensions (mm)
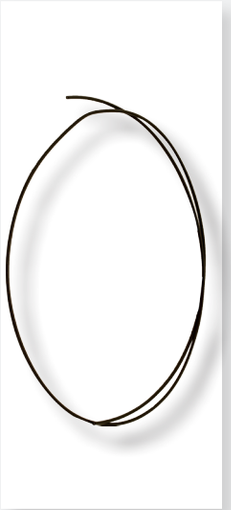	Ø optical fibre core: 1 mm Ø optical fibre: 2.2 mm (plastico) optical fibre: single - sold by the meter	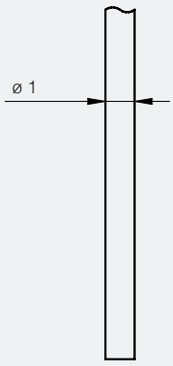

collimator lenses AF/ER4 model

product	main features		dimensions (mm)
	optical fibre code	AF/1S	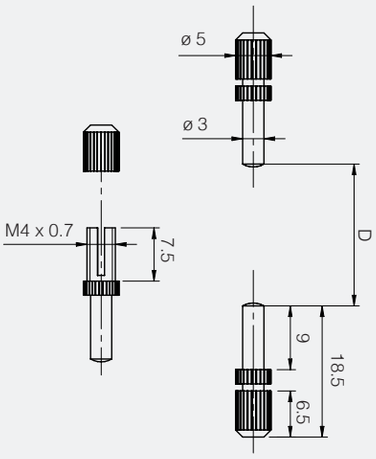
	Ø optical fibre core	2.2 mm (plastic)	
	distance (with SSF)	600 mm	
	distance (with FS1)	600 mm	
	distance (with FX3)	2,000 mm	
	distance (with FX4)	3,000 mm	
	distance (with F1R)	1,500 mm	
	distance (with F2R)	700 mm	
	distance (with F6R)	3,000 mm	
	protection degree	IP67 (EN60529)	
	temperature range	-40°C....+70°C	
	materials	glass, ETM, nickel plated brass	

collimator lenses AF/ER5 model

product	main features		dimensions (mm)
	optical fibre code	AF/1S	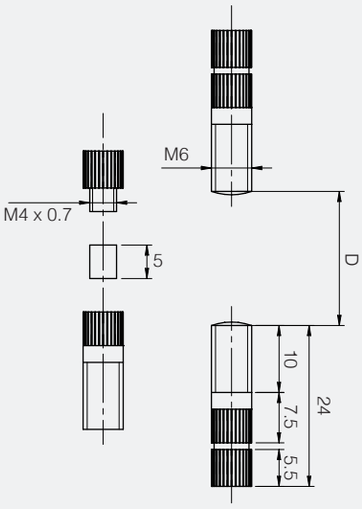
	Ø optical fibre core	2.2 mm (plasticc)	
	distance (with SSF)	1,000 mm	
	distance (with FS1)	1,000 mm	
	distance (with FX3)	3,000 mm	
	distance (with FX4)	5,000 mm	
	distance (with F1R)	2,200 mm	
	distance (with F2R)	1,000 mm	
	distance (with F6R)	4,500 mm	
	protection degree	IP67 (EN60529)	
	temperature range	-40°C....+70°C	
	materials	glass, ETM, nickel plated brass	

collimator lenses AF/ER6 model

product	main features		dimensions (mm)
	optical fibre code	AF/1S	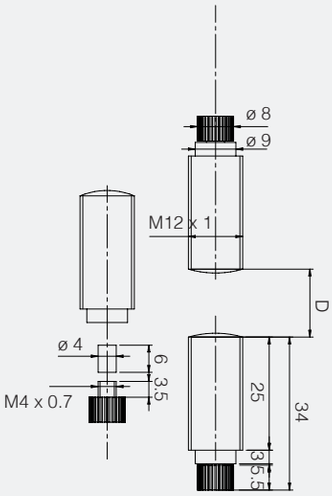
	Ø optical fibre core	2.2 mm (plastic)	
	distance (with SSF)	3,500 mm	
	distance (with FS1)	3,500 mm	
	distance (with FX3)	6,000 mm	
	distance (with FX4)	8,000 mm	
	distance (with F1R)	4,500 mm	
	distance (with F2R)	2,000 mm	
	distance (with F6R)	6,000 mm	
	protection degree	IP67 (EN60529)	
	temperature range	-40°C....+70°C	
	materials	glass, ETM, nickel plated brass	

collimator lenses AF/ER7 model

product	main features		dimensions (mm)
	optical fibre code	AF/1S	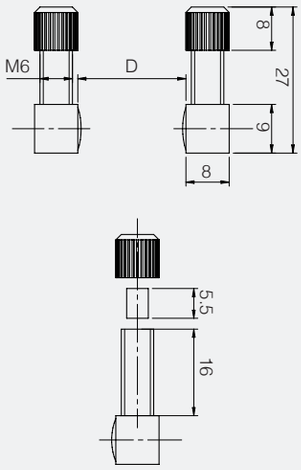
	Ø optical fibre core	2.2 mm (plastic)	
	distance (with SSF)	1,000 mm	
	distance (with FS1)	1,000 mm	
	distance (with FX3)	6,000 mm	
	distance (with FX4)	8,000 mm	
	distance (with F1R)	4,500 mm	
	distance (with F2R)	2,000 mm	
	distance (with F6R)	6,000 mm	
	protection degree	IP67 (EN60529)	
	temperature range	-40°C....+70°C	
	materials	glass, ETM, nickel plated brass	

collimator lenses AF/ER9 model

product	main features		dimensions (mm)
	type	P/R	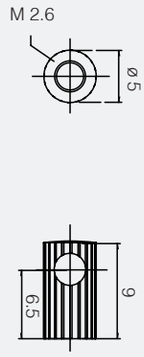
	accessory type	90° optic deviator accessory	
	SSF (EG =1)	120 mm	
	FS1 (EG =1)	120 mm	
	FX3 (EG =1)	700 mm	
	FX4 (EG =1)	700 mm	
	F1R	400 mm	
	F2R	200 mm	
	F6R	800 mm	
	ø optical fibre core	1	
	fibre model	CF/RB3-20	

collimator lenses AF/1A2 model

product	main features		dimensions (mm)
	type	accessory adapter for fibre diameter from 1 to 2 mm	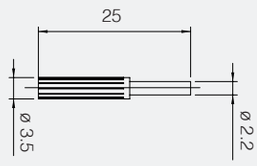
	fibre model	all optical fibres models with ø 1 mm	

collimator lenses ST28 model

product	main features		dimensions (mm)
	type	P/R	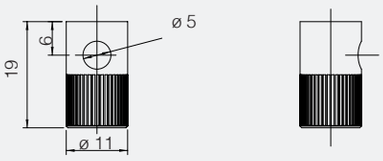
	accessory type	right angle beam adapter	
	SSF (EG =1)	700 mm	
	FS1 (EG =1)	700 mm	
	FX3 (EG =1)	4,200 mm	
	FX4 (EG =1)	5,600 mm	
	F1R	1,500 mm	
	F2R	1,000 mm	
	F6R	3,000 mm	
	ø optical fibre core	-	
	fibre model	CF/RBA-** CF/RCA-20	

CV series

High temperature glass optical fibres

features

- **Models with flexible fibre heads (with sleeve)**
- **Wide range of accessories (AF serie)**
- **IP67 protection degree**
- **SSF - FS1 - FX3 - FX4 serie connectable**
- **Approvals: CE**

web contents

- **Application notes**
- **Photos**
- **Catalogue / Manuals**

ordering system

glass fibres up to 200°C

type	SSF (EX.G.=1)	FS1 (EX.G.=1)	FX3 (EX.G.=1)	FX4 (EX.G.=1)	∅ optical fibre core	free-cut	length [2]	head shape	lenses	model [1]
scanner	50 mm	50 mm	150 mm	150 mm	1	-	1 - 2 m	M4	-	CV/CB1-**
								M4 + sleeve		CV/CB3 -**
P/R	90 mm	90 mm	600 mm	900 mm						CV/RB4 -**
								M4		CV/RB6 -**

ordering system

glass fibres up to 250°C

type	SSF (EX.G.=1)	FS1 (EX.G.=1)	FX3 (EX.G.=1)	FX4 (EX.G.=1)	∅ optical fibre core	free-cut	length [2]	head shape	lenses	model [1]
scanner	50 mm	50 mm	150 mm	150 mm	1	-	1 - 2 m	M4	-	CV/CB1-**ME
								M4 + sleeve		CV/CB3 -**ME
P/R	90 mm	90 mm	600 mm	900 mm						CV/RB4 -**ME
								M4		CV/RB6 -**ME

[1] The last two bits of the code show the fibre length (in dm) [2] Standard length
Special lengths are available on request.

diffuse reflection (high temperature) CV/CB1-** model

product	main features		dimensions (mm)
	Ø optical fibre core	1 mm	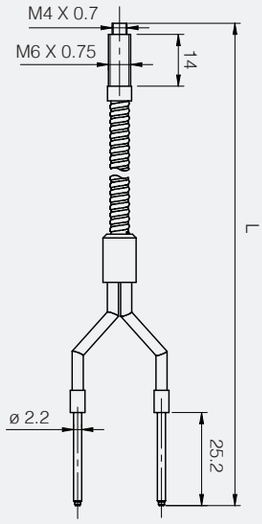
	distance (with SSF)	50 mm	
	distance (with FS1)	50 mm	
	distance (with FX3)	150 mm	
	distance (with FX4)	150 mm	
	fibre length (L)	1...2 m	
	free-cut	-	
	head shape	M4	
	protection degree	IP67 (EN60529)	
	temperature range	-40°C....+200°C (standard version) -40°C....+250°C (ME version)	
	optical fibre materials	glass, ETM, nickel plated brass	
	head materials	nickel plated brass	
	accessories available	AF/FC1, AF/FC2	

diffuse reflection with sleeve (high temperature) CV/CB3-** model

product	main features		dimensions (mm)
	Ø optical fibre core	1 mm	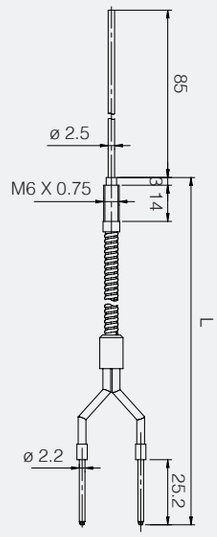
	distance (with SSF)	50 mm	
	distance (with FS1)	50 mm	
	distance (with FX3)	150 mm	
	distance (with FX4)	150 mm	
	fibre length (L)	1...2 m	
	free-cut	-	
	head shape	M4 with sleeve	
	protection degree	IP67 (EN60529)	
	temperature range	-40°C....+200°C (standard version) -40°C....+250°C (ME version)	
	optical fibre materials	glass, ETM, inox	
	head materials	nickel plated brass	
	accessories available	.	

through-beam with sleeve (high temperature) CV/RA4-**

product	main features	
	Ø optical fibre core	1 mm
	distance (with SSF)	90 mm
	distance (with FS1)	90 mm
	distance (with FX3)	600 mm
	distance (with FX4)	900 mm
	fibre length (L)	1...2 m
	free-cut	-
	head shape	M4 with sleeve
	protection degree	IP67 (EN60529)
	temperature range	-40°C....+200°C (standard version) -40°C....+250°C (ME version)
	optical fibre materials	glass, ETM, inox
	head materials	nickel plated brass
	accessories available	-

dimensions (mm)

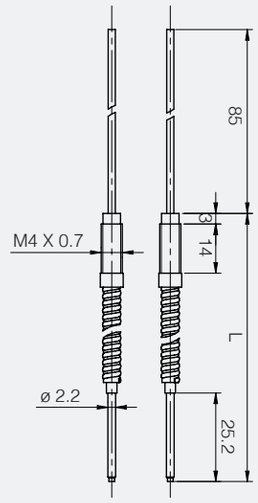

through-beam (high temperature) CV/RB6-** model

product	main features	
	Ø optical fibre core	1 mm
	distance (with SSF)	90 mm
	distance (with FS1)	90 mm
	distance (with FX3)	600 mm
	distance (with FX4)	900 mm
	fibre length (L)	1...2 m
	free-cut	-
	head shape	M4
	protection degree	IP67 (EN60529)
	temperature range	-40°C....+200°C (standard version) -40°C....+250°C (ME version)
	optical fibre materials	glass, ETM, inox
	head materials	nickel plated brass
	accessories available	look AF series

dimensions (mm)

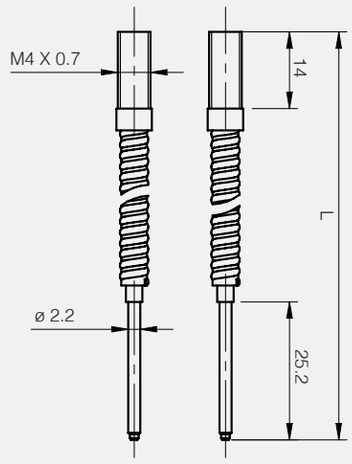

notes

CV series

Accessories for CV optical fibres

features

- Wide range of focusing devices
- Wide range of additional lenses
- IP67 protection degree
- SSF – FS1 – FX3 – FX4 series connectable
- Approvals: CE

web contents

- Application notes
- Photos
- Catalogue / Manuals

ordering system

type	accessory type	SSF (EX.G.=1)	FS1 (EX.G.=1)	FX3 (EX.G.=1)	FX4 (EX.G.=1)	Ø optical fibre core	head shape	fibre model	models
scanner	focalizzatore	25 mm	25 mm	30 mm	30 mm	1	Ø 6.5 mm	CV/CB1-**	AF/FC1
		45 mm	45 mm	50 mm	50 mm			CV/CB1-**	AF/FC2
P/R	lente addizzionale	1,000 mm	1,000 mm	4,000 mm	4,000		Ø 5 mm	CV/RB6-**	AF/ER1
		3,000 mm	3,000 mm	8,000 mm	10,000 mm		Ø 8.5 mm	CV/RB6-**	AF/ER2
				14,000 mm	16,000 mm		13 x 13 mm	CV/RB6-**	AF/ER3

collimator lenses AF/FC1 model

product	main features		dimensions (mm)
	Ø optical fibre core	CV/CB1-**	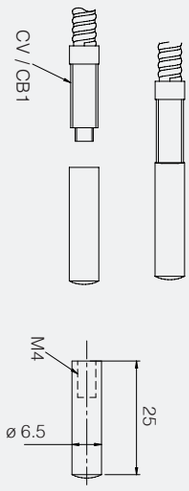
	distance (with SSF)	25 mm	
	distance (with FS1)	25 mm	
	distance (with FX3)	30 mm	
	distance (with FX4)	30 mm	
	thread	M4	
	protection degree	IP67 (EN60529)	
	temperature range	-40°C....+125°C	
	materials	glass, nickel-plated brass	

focusing device (diffuse reflection) AF/FC2 model

product	main features	
	Ø optical fibre core	CV/CB1-**
	distance (with SSF)	45 mm
	distance (with FS1)	45 mm
	distance (with FX3)	50 mm
	distance (with FX4)	50 mm
	thread	M4
	protection degree	IP67 (EN60529)
	temperature range	-40°C....+125°C
	materials	glass, nickel-plated brass

dimensions (mm)

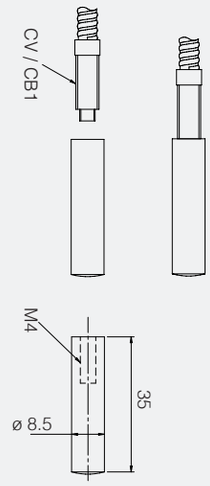

additional lens (through-beam) AF/ER1 model

product	main features	
	Ø optical fibre core	CV/RB6-**
	distance (with SSF)	1,000 mm
	distance (with FS1)	1,000 mm
	distance (with FX3)	4,000 mm
	distance (with FX4)	6,000 mm
	thread	M4
	protection degree	IP67 (EN60529)
	temperature range	-40°C....+70°C
	materials	glass, nickel-plated brass

dimensions (mm)

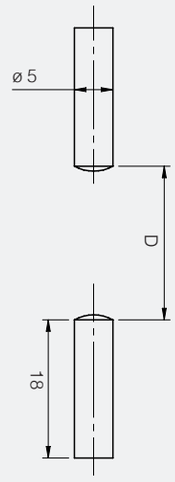

additional lens (through-beam) AF/ER2 model

product	main features		dimensions (mm)
	Ø optical fibre core	CV/RB6-**	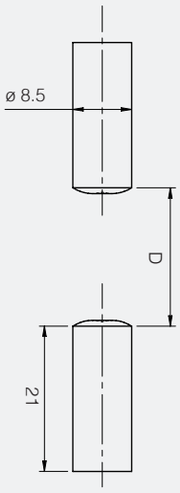
	distance (with SSF)	3,000 mm	
	distance (with FS1)	3,000 mm	
	distance (with FX3)	8,000 mm	
	distance (with FX4)	10,000 mm	
	thread	M4	
	protection degree	IP67 (EN60529)	
	temperature range	-40°C....+125°C	
	materials	glass, nickel-plated brass	

additional lens (through-beam) AF/ER3 model

product	main features		dimensions (mm)
	Ø optical fibre core	CV/RB6-**	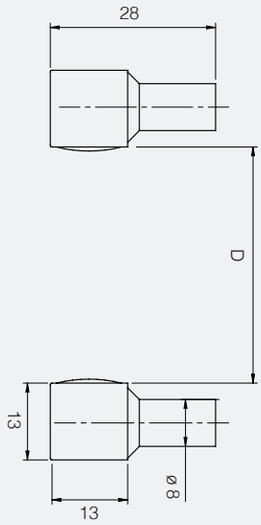
	distance (with SSF)	3,000 mm	
	distance (with FS1)	3,000 mm	
	distance (with FX3)	8,000 mm	
	distance (with FX4)	10,000 mm	
	thread	M4	
	protection degree	IP67 (EN60529)	
	temperature range	-40°C....+70°C	
	materials	glass, nickel-plated brass	