Ultrasonic Sensors

Nominal sensing distance

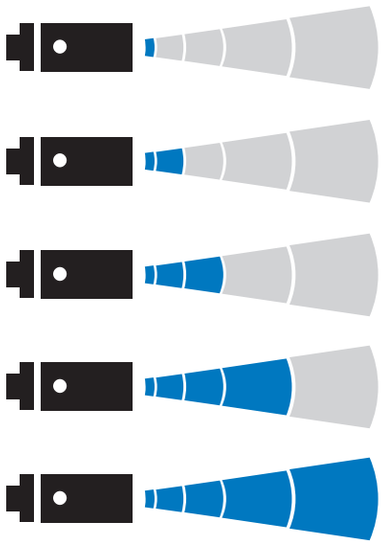

Until 300 mm

From 300 to 900 mm

From 900 to 1.600 mm

From 1.600 to 3.500 mm

Over 3.500 mm

Ultrasonic Sensor
Basic theory

Operation principle of ultrasonic sensor

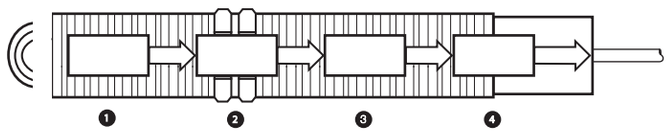

1. ultrasonic capsule
2. oscillator
3. detection circuit
4. output circuit

Ultrasonic sensors are composed by: ultrasonic transducer, oscillator, trigger circuit and output circuit. There are three working principles:

• direct diffusion

Ultrasonic transducer is energized by high voltage pulses and starts to emit an ultrasonic signal. The ultrasonic signal is reflected by the target towards the sensor. Trigger circuit measures the time between the emission and the detection of the signal. Since the speed of the ultrasonic beam in air is known, it is easy to have not only an indication of the presence of the target, but also a measure of the distance between sensor and target.
In diffuse models, the ultrasonic transducer works before as emitter and then as receiver. When it is in "emission mode" no signal can be detected. This imply that in front of the sensor there is a blind zone where the detection of objects is not possible or not reliable.
The dimension of the blind zone depends on the type of ultrasonic transducer used.

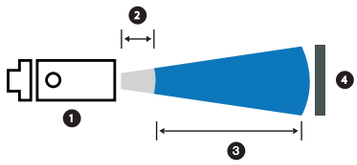

1. ultrasonic sensor
2. blind zone
3. detection field
4. target

• retroreflection
To work correctly, it is necessary a background/reflector (any flat, orthogonal, fixed part). The sensor measures the distance between sensor and reflector. Any changes in this measure means that there is an object between sensor and reflector. In this case we don't have a blind zone, but we have to consider a minimum sensing distance between sensor and reflector: the object can be detected in the whole working area.

• emitter and receiver
There are two separate units: emitter and receiver. The receiver detects the signal from the emitter. If there is no signal, this means that there is an object between emitter and receiver.

Considerations on targets tipology

Ultrasonic sensor can detect any kind of targets (more or less). The effective detection distance depends on: target dimensions (more the target is big, more ultrasonic signal is reflected, higher the sensing distance that it is possible to reach), materials (compact targets, as metal, wood, liquids, reflect a lot of the ultrasonic signal – low density materials, as powders, foams, absorb the majority of the ultrasonic beam). Sound absorbing materials can be detected only at very low distance.

In the direct diffuse sensors, other factors have to be considered:

• shape of the object

If the objects are perpendicular to the ultrasonic beam, the beam is reflected towards the sensor, and so the object is well detected. Objects with irregular or tilted shape, scatters the beam, so it is possible that they would not be detected.

• object temperature
Even if MD sensors are fully thermically compensated in the whole sensing range, a high thermal gradient between object and environment, can create turbulent air whirpool that can distort the ultrasonic beam.
All the measures indicate in the catalogue are releted to the standard target according EN60947-5-2. Users have to take care of the possible differences with real target used.

Switching frequency

Switching frequency is the maximum output switching frequency performed by the output circuit when standard targets cross the sensing field. It is depending on: sensor's characteristics, target dimensions and size, distance from the targets.

Hysteresis

Hysteresis is the difference between switch on and switch off position. It is necessary to avoid output oscillations if the target is vibrating or fixed close to the switching point.

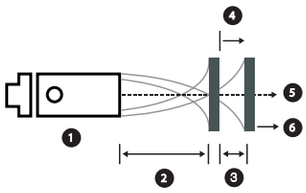

1. ultrasonic sensor
2. switching point rapprochement (working distance)
3. hysteresis
4. switching point expulsion
5. direction of motion
6. target

selector

function	dimension	material	working distance (mm)												pag.
			40...300	50...400	60...800	100...900	80 ... 1,200	200 ... 1,500	150 ... 1,600	200 ... 2,200	250 ... 3,500	350 ... 3,500	350 ... 6,000	600 ... 6,000	
direct diffuse	M18 short housing	plastic	UK6A		UK6C		UK6D								511
		AISI316L	UK6A		UK6C		UK6D								511
	M18 with Teach-In	plastic		UK1A		UK1C			UK1D	UK1F					501
	M18 with Teach-In 90°			UK1A					UK1D	UK1F					501
	M18 with Teach-In	AISI316L		UK1A		UK1C		UK1D							501
	M30	plastic									UT1B				519
		AISI316L										UT1B			519
	M30 large front	plastic											UT2F		519
	compact cubic													QU6	531

function	dimension	material	working distance (mm)												pag.
			0...300	50...300	100...400	80...800	150...900	0...1,100	100 ... 1,200	250 ... 1,600	300 ... 2,200	250 ... 3,500	350 ... 3,500	350 ... 6,000	
retro reflective	M18 corpo corto	plastic		UKR6A		UKR6C			UKR6D						511
	M18 with Teach-In				UKR1A		UKR1C			UKR1D	UKR1F				501
	M30											UTR1B			519
	M30 large front												UTR2F		519
emitter/ receiver	cubic		UHZ												527
								UHS							527

function	dimension	material	page
fork	fork for labels	metallic	535

UK1 and UKR1series

M18 cylindrical direct diffuse & retro-reflective Ultrasonic Sensor UK1 with Teach-In button

features

- **Models with digital programmable output**
- **Models with current or voltage analogue outputs**
- **Adjustable Hysteresis function: model with programmable double digital outputs, specific for levels**
- **Working area adjusting (window teach or single point teach) by Teach-in button suitable for all models for a fast coming into work**
- **Multifunction LED indicator: output type, adjustment procedure, NO/NC selection and reverse analog output slope**

web contents

- **Application notes**
- **Photos**
- **Catalogue / Manuals**

code description (*)

UK ■ 1 A / E 1 - 0 E UL AN

series	UK	M18 Ultrasonic Sensor
function	■	Direct diffuse models
	R	Retroreflective models
housing type	1	Standard housing
nominal sensing distance Sn	A	50 - 400 mm
	C	100 - 900 mm
	D	150 - 1,600 mm (plastic models) / 200 - 1,500 mm (metallic models)
	F	200 - 2,200 mm
adjustment	E	Adjustment by Teach-In button
output	1	0...10 V single voltage analogue output
	2	4...20 mA single current analogue output
	4	NPN - NO/NC digital output + 4 ... 20 mA current analogue output
	6	PNP - NO/NC digital output + 4 ... 20 mA current analogue output
	7	PNP - NO/NC digital output + 0 ... 10 V voltage analogue output
	9	NPN - NO/NC digital output + 0 ... 10 V voltage analogue output
	N	NPN - NO/NC single digital output
	P	PNP - NO/NC single digital output
	W	PNP - two digital outputs with standard window and adjustable hysteresis functions
	M	NPN - two digital outputs with standard window and adjustable hysteresis functions
housing materials	0	Plastic housing
	1	AISI 316L (DIN 1.4404) stainless steel housing (axial)
	2	90° emission, plastic housing
cable exit / connector	A	Axial cable exit (2 m)
	E	M12 plug cable exit
cULus	UL	With cULus certification
ATEX	AN	ATEX certified, Cat.3 Zona 2,22

(*) Multiplexing models and with syncronization available.

available models

single digital output standard cULus certified available models

housing	distance (mm)	output	analogue output 0...10 V	analogue output 4...20 mA	1 x PNP - NO/NC	1 x NPN - NO/NC
plastic	50...400	M12 connector	UK1A/E1-0EUL	UK1A/E2-0EUL	UK1A/EP-0EUL	UK1A/EN-0EUL
	100...900		UK1C/E1-0EUL	UK1C/E2-0EUL	UK1C/EP-0EUL	UK1C/EN-0EUL
	150...1,600		UK1D/E1-0EUL	UK1D/E2-0EUL	UK1D/EP-0EUL	UK1D/EN-0EUL
	200...2,200		UK1F/E1-0EUL	UK1F/E2-0EUL	UK1F/EP-0EUL	UK1F/EN-0EUL
	50...400	cable	UK1A/E1-0AUL	UK1A/E2-0AUL	UK1A/EP-0AUL	UK1A/EN-0AUL
	100...900		UK1C/E1-0AUL	UK1C/E2-0AUL	UK1C/EP-0AUL	UK1C/EN-0AUL
	150...1,600		UK1D/E1-0AUL	UK1D/E2-0AUL	UK1D/EP-0AUL	UK1D/EN-0AUL
	200...2,200		UK1F/E1-0AUL	UK1F/E2-0AUL	UK1F/EP-0AUL	UK1F/EN-0AUL

available models

double digital output standard cULus certified available models

	distance (mm)	output	2 x PNP - NO/NC	2 x NPN - NO/NC
plastic	50...400	M12 connector	UK1A/EW-0EUL	UK1A/EM-0EUL
	100...900		UK1C/EW-0EUL	UK1C/EM-0EUL
	150...1,600		UK1D/EW-0EUL	UK1D/EM-0EUL
	200...2,200		UK1F/EW-0EUL	UK1F/EM-0EUL
	50...400	cable	UK1A/EW-0AUL	UK1A/EM-0AUL
	100...900		UK1C/EW-0AUL	UK1C/EM-0AUL
	150...1,600		UK1D/EW-0AUL	UK1D/EM-0AUL
	200...2,200		UK1F/EW-0AUL	UK1F/EM-0AUL
stainless steel AISI 316L	50...400	M12 connector	UK1A/EW-1EUL	UK1A/EM-1EUL
	100...900		UK1C/EW-1EUL	UK1C/EM-1EUL
	200...1,500		UK1D/EW-1EUL	UK1D/EM-1EUL
	50...400	cable	UK1A/EW-1AUL	UK1A/EM-1AUL
	100...900		UK1C/EW-1AUL	UK1C/EM-1AUL
	200...1,500		UK1D/EW-1AUL	UK1D/EM-1AUL

available models

analog and digital output cULus certified

housing	distance (mm)	output	1 x PNP - NO/NC + 1 x 4...20 mA	1 x NPN - NO/NC + 1 x 4...20 mA	1 x PNP - NO/NC + 1 x 0...10 V	1 x NPN - NO/NC + 1 x 0...10 V
plastic	50...400	M12 connector	UK1A/E6-0EUL	UK1A/E4-0EUL	UK1A/E7-0EUL	UK1A/E9-0EUL
	100...900		UK1C/E6-0EUL	UK1C/E4-0EUL	UK1C/E7-0EUL	UK1C/E9-0EUL
	150...1,600		UK1D/E6-0EUL	UK1D/E4-0EUL	UK1D/E7-0EUL	UK1D/E9-0EUL
	200...2,200		UK1F/E6-0EUL	UK1F/E4-0EUL	UK1F/E7-0EUL	UK1F/E9-0EUL
	50...400	cable	UK1A/E6-0AUL	UK1A/E4-0AUL	UK1A/E7-0AUL	UK1A/E9-0AUL
	100...900		UK1C/E6-0AUL	UK1C/E4-0AUL	UK1C/E7-0AUL	UK1C/E9-0AUL
	150...1,600		UK1D/E6-0AUL	UK1D/E4-0AUL	UK1D/E7-0AUL	UK1D/E9-0AUL
	200...2,200		UK1F/E6-0AUL	UK1F/E4-0AUL	UK1F/E7-0AUL	UK1F/E9-0AUL
stainless steel AISI 316L	50...400	M12 connector	UK1A/E6-1EUL	UK1A/E4-1EUL	UK1A/E7-1EUL	UK1A/E9-1EUL
	100...900		UK1C/E6-1EUL	UK1C/E4-1EUL	UK1C/E7-1EUL	UK1C/E9-1EUL
	200...1,500		UK1D/E6-1EUL	UK1D/E4-1EUL	UK1D/E7-1EUL	UK1D/E9-1EUL
	50...400	cable	UK1A/E6-1AUL	UK1A/E4-1AUL	UK1A/E7-1AUL	UK1A/E9-1AUL
	100...900		UK1C/E6-1AUL	UK1C/E4-1AUL	UK1C/E7-1AUL	UK1C/E9-1AUL
	200...1,500		UK1D/E6-1AUL	UK1D/E4-1AUL	UK1D/E7-1AUL	UK1D/E9-1AUL

available models

cULus and ATEX certified

housing	distance (mm)	output	analogue output 0...10 V	analogue output 4...20 mA	1 x PNP - NO/NC	1 x NPN - NO/NC + 1 x 4...20 mA	1 x PNP - NO/NC + 1 x 0...10 V
plastico	50...400	M12 connector	UK1A/E1-0EULAN	UK1A/E2-0EULAN	UK1A/EP-0EULAN	UK1A/E6-0EULAN	UK1A/E7-0EULAN
	100...900		UK1C/E1-0EULAN	UK1C/E2-0EULAN	UK1C/EP-0EULAN	UK1C/E6-0EULAN	UK1C/E7-0EULAN
	150...1.600		UK1D/E1-0EULAN	UK1D/E2-0EULAN	UK1D/EP-0EULAN	UK1D/E6-0EULAN	UK1D/E7-0EULAN
	200...2.200		UK1F/E1-0EULAN	UK1F/E2-0EULAN	UK1F/EP-0EULAN	UK1F/E6-0EULAN	UK1F/E7-0EULAN

technical specifications

cULus certified models

	UK1A/E*-**UL	UK1C/E*-**UL	UK1D/E*-**UL	UK1F/E*-**UL
				
maximum sensing distance	400 mm (1)	900 mm (2)	1,600 mm (2) 1,500 mm (2)	2,200 mm (2)
minimum sensing distance	50 mm	100 mm	150 mm 200 mm	200 mm
sensing range (Sd)	50...400 mm	100...900 mm	150...1,600 mm 200...1,500 mm	200...2,200 mm
beam angle	± 8° / ± 7°	± 7°	± 8° / ± 7°	± 7°
switching frequency (digital output)	10 Hz	4 Hz	2 Hz / 1Hz	1 Hz
response time (digital output)	500 ms	≤125 ms	250 ms / 500 ms	500 ms
hysteresis	1%			
repeatibility	0.5%			
resolution	1 mm	2 mm	3 mm	3 mm
linearity error	1%			
temperature range	- 20°C...+ 60°C			
temperature compensation	●			
operating voltage	15 - 30 Vcc			
temperature drift	5%			
ripple	≤ 7%			
leakage current	10 µA @ 30 Vcc			
output voltage drop	2.2 V max. (IL = 100 mA)			
no-load supply current	≤ 50 mA			
output current (digital output)	100 mA (3)			
minimum load resistance (analog voltage output)	3 k Ω			
set point adjustment	Teach-In button			
power on delay	≤ 500 ms (digital output) ≤ 900 ms (analogue output)			
power supply protections	polarity reversal, transient			
digital output protections	short circuit (auto reset), overvoltage pulses			
analogical electrical protections	overvoltage pulses			
EMC	conforming to EMC Directive, according to EN 60947-5-2			
protection degree	IP67 (EN60529) (4)			
housing material	PBT/stainless steel AISI 316L			PBT
active head material	Epoxy-Glass resin			
tightening torque	1 Nm plastic housing / 50 metallic housing			1 Nm
weight	plastic version: 70 g connector / 110 g cable metallic version: 100 g connector / 170 gr cable			
storage temperature	- 35°C...+ 70° without freezing			

(1) Metallic target 100 x 100 mm (2) Metallic target 200 x 200 (3) Available models without cULus certified with output current: 500 mA (models with single or double digital output); 300 mA (models with digital and analog output) (4) Protection guarantee only with plug cable well mounted

avalaible models

retroreflective models

housing	distance (mm)	output	material	PNP - NO/NC	NPN - NO/NC
M18	100...400	M12	plastic	UKR1A/EP-0EUL	UKR1A/EN-0EUL
	150...900			UKR1C/EP-0EUL	UKR1C/EN-0EUL
	250...1,600			UKR1D/EP-0EUL	UKR1D/EN-0EUL
	300...2,200			UKR1F/EP-0EUL	UKR1F/EN-0EUL
	100...400	cable		UKR1A/EP-0AUL	UKR1A/EN-0AUL
	150...900			UKR1C/EP-0AUL	UKR1C/EN-0AUL
	250...1,600			UKR1D/EP-0AUL	UKR1D/EN-0AUL
	300...2,200			UKR1F/EP-0AUL	UKR1F/EN-0AUL

technical specifications

retroreflective models

	UKR1A/E*-*E	UKR1C/E*-*E	UKR1D/E*-*E	UKR1F/E*-*E
nominal sensing distance	400 mm	900 mm	1,600 mm	2,200 mm
reflector minimum sensing distance	100 mm	150 mm	250 mm	300 mm
beam angle	±8°	±7°	± 8°	± 7°
switching frequency	8 Hz	3 Hz	1 Hz	1 Hz
operating voltage	15...30 Vdc			
max. ripple content	5%			
output type	PNP or NPN NO/NC selectable			
output current	100 mA			
output voltage drop	≤ 2.2 V (@ I = 100mA)			
no-load supply current	≤ 50 mA @ Val=24V			
leakage current	≤ 10 µA @ 30V			
power on delay	≤ 500 ms			
ambient temperature range	- 20°C...+ 60°C			
temperature drift of Sr	≤ 5 %			
short-circuit protection	● (autoreset)			
induction protection	●			
voltage reversal protection	●			
weight	26 g			
LEDs	yellow: exit			
protection degree	IP67			
EMC	IEC60947-5-2			
housing material	plastic housing PBT			
active head material	glass resin			
connection	M12 plug cable exit			
weight	70 g connector / 100 g cable			

available models

90° emission models

housing	portata (mm)	output	material	PNP - NO/NC 0...10 V	NPN - NO/NC 0...10 V	PNP - NO/NC 4...20 mA	NPN - NO/NC 4...20 mA	2 x PNP hysteresis/window	2 x NPN hysteresis/window
M18	50...400	M12	plastic	UK1A/E7-2EUL	UK1A/E9-2EUL	UK1A/E6-2EUL	UK1A/E4-2EUL	UK1A/EW-2EUL	UK1A/EM-2EUL
	150...1.600			UK1D/E7-2EUL	UK1D/E9-2EUL	UK1D/E6-2EUL	UK1D/E4-2EUL	UK1D/EW-2EUL	UK1D/EM-2EUL
	200...2.200			UK1F/E7-2EUL	UK1F/E9-2EUL	UK1F/E6-2EUL	UK1F/E4-2EUL	UK1F/EW-2EUL	UK1F/EM-2EUL

technical specifications

90° emission models

	UK1A/E*-2EUL	UK1D/E*-2EUL	UK1F/E*-2EUL
nominal sensing distance	400 mm	1,600 mm	2,200 mm
minimum sensing distance	50 mm	150 mm	200 mm
sensing range	50...400 mm	150...1,600 mm	200...2,200 mm
beam angle	± 8°	± 8°	± 7°
hysteresis	1%		
repeatibility	0.5%		
switching frequency	10 Hz	2 Hz	1 Hz
response time	500 ms		
operating voltage	15...30 Vdc		
max. ripple content	7%		
output current	100 mA (digital output)		
output voltage drop	≤ 2.2 V (@ I = 100mA)		
no-load supply current	≤ 50 mA		
leakage current	≤ 10 µA @ 30V		
power on delay	≤ 900 mA		
ambient temperature range	- 20°C...+ 60°C		
temperature drift of Sr	≤ 5%		
short-circuit protection	● (autoreset)		
induction protection	●		
voltage reversal protection	●		
weight	75 g		
LEDs	green: echo - yellow: output		
protection degree	IP67		
housing material	plastic housing: PBT		
active head material	glass reinforced epoxy resin		
connection	M12 plug cable exit		

electrical diagrams of connections

PNP NO/NC + analogue output models

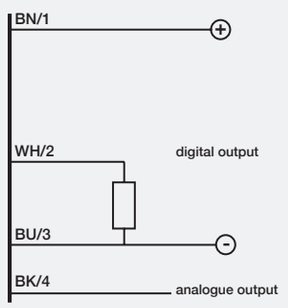

PNP models with double output

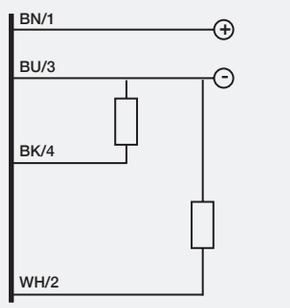

PNP NO/NC with single digital output

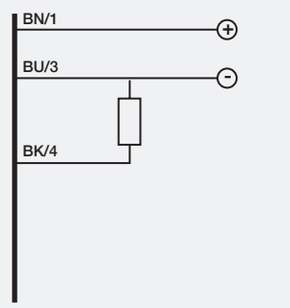

models with single analogue output

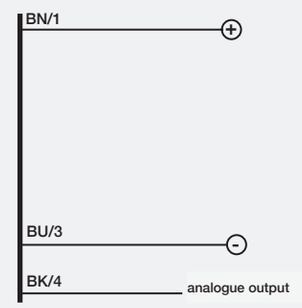

NPN NO/NC + analogue output models

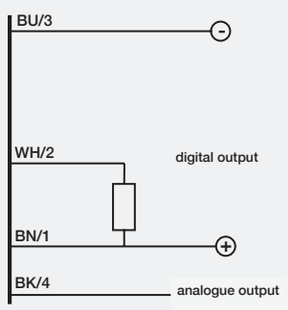

NPN models with double output

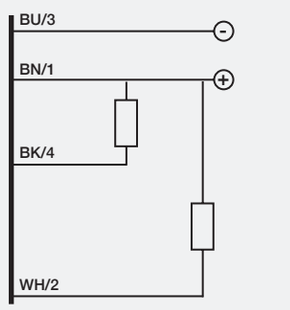

NPN NO/NC models with single digital output

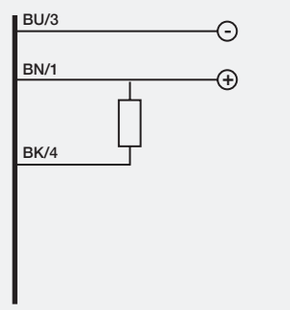

BN	brown
BU	blue
BK	black
WH	white

connectors

M12 UK1*/E7 - *E** UK1*/E4 - *E** UK1*/E6 - *E** UK1*/E9 - *E**

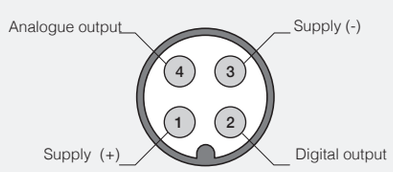

M12 UK1*/EM - *E** UK1*/EW - *E**

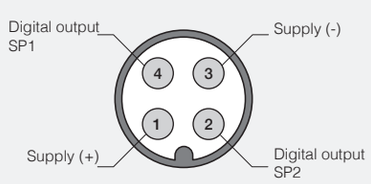

M12 UK1*/E1 - *E** UK1*/EP - *E** UK1*/E2 - *E** UK1*/EN - *E**

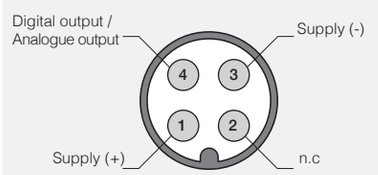

available outputs

models with single digital output

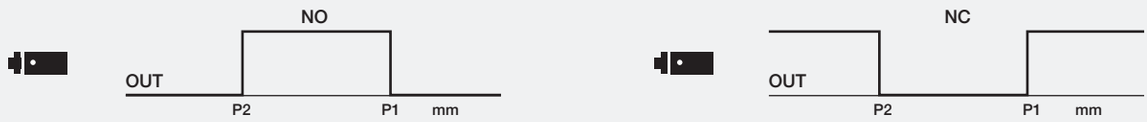

models with single analogue output

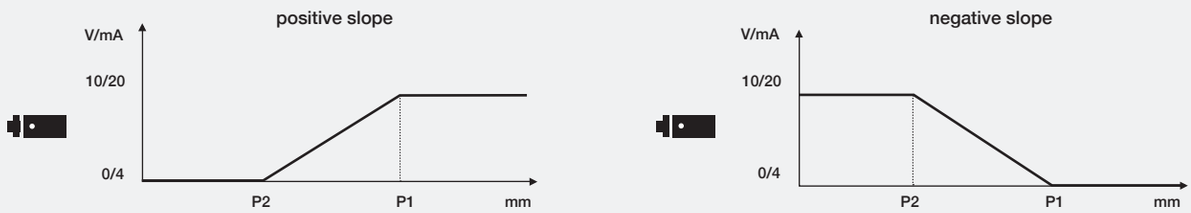

models with double digital output - standard window and ajdjustable hysteresis outputs

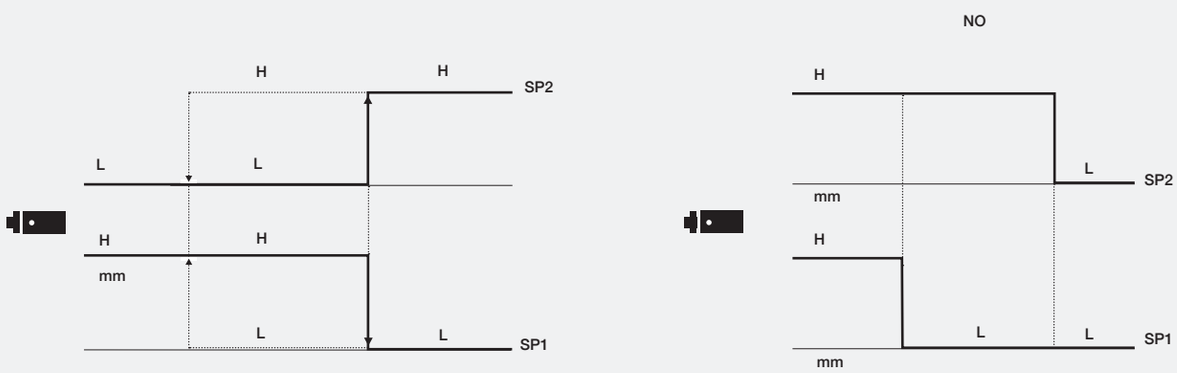

models with digital output + analogue output [1]

[1] It can be used as a single model output

P1	maximum selected working distance and first point to select
P2	minimum selected working distance and second point to select

response diagrams

direct diffuse models

UK1A/**-** parallel displacement

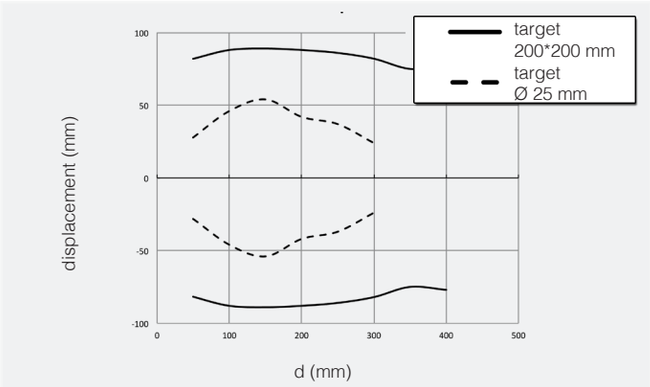

UK1C/**-** parallel displacement

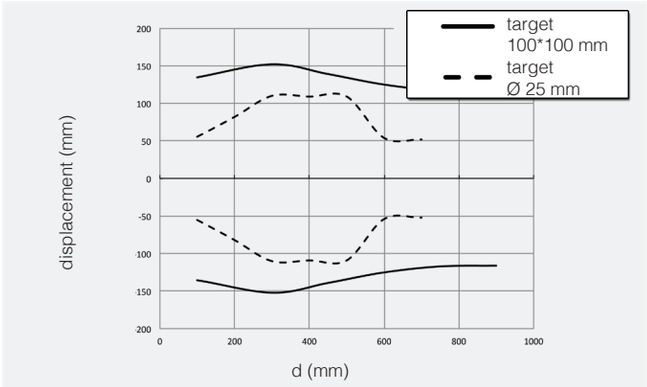

UK1D/**-** parallel displacement

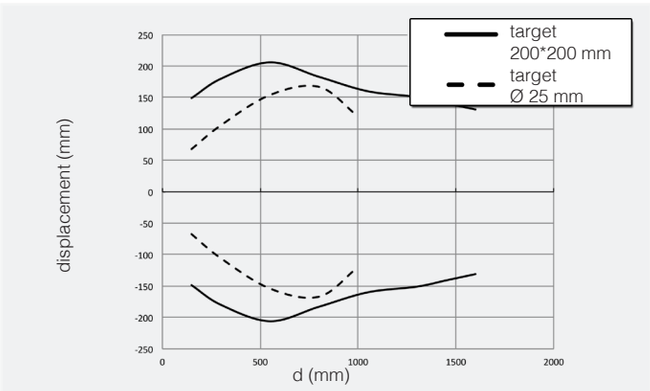

UK1F**-** parallel displacement

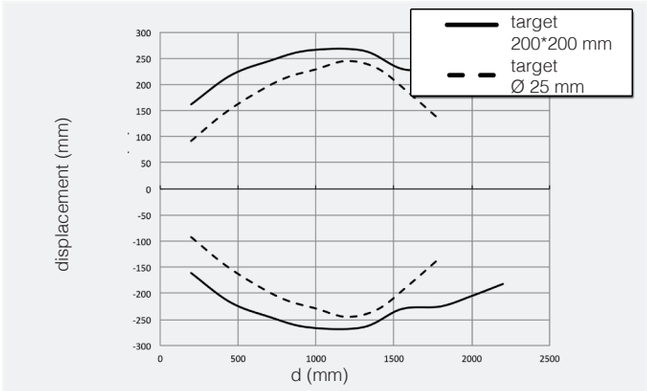

response diagrams

retroreflective models

UKR1A/-** parallel displacement**

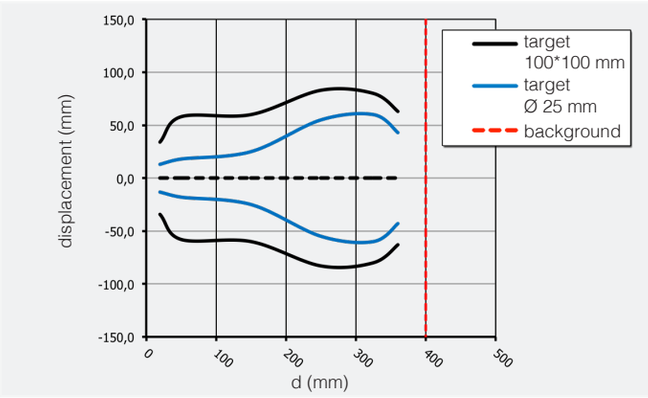

UKR1C/-** parallel displacement**

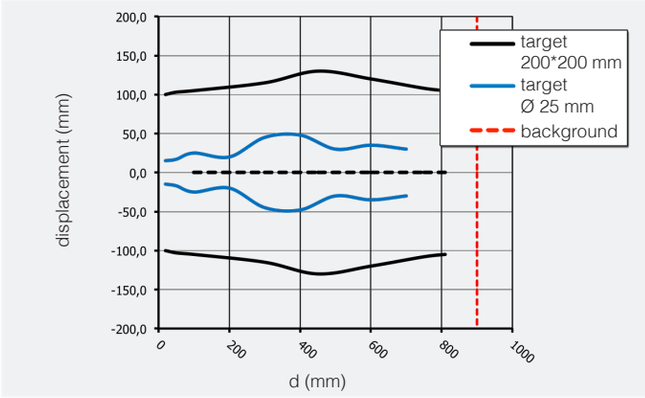

UKR1D/-** parallel displacement**

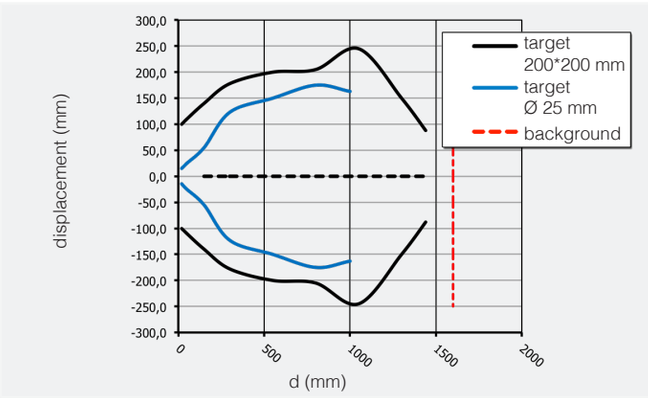

UKR1F-** parallel displacement**

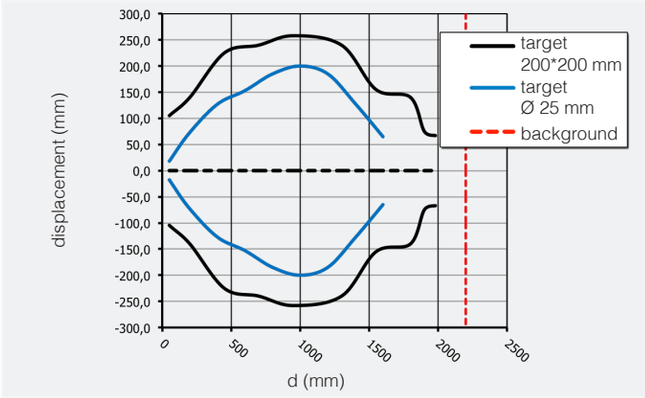

dimensions (mm)

plastic models

UK1*/ - 2E**

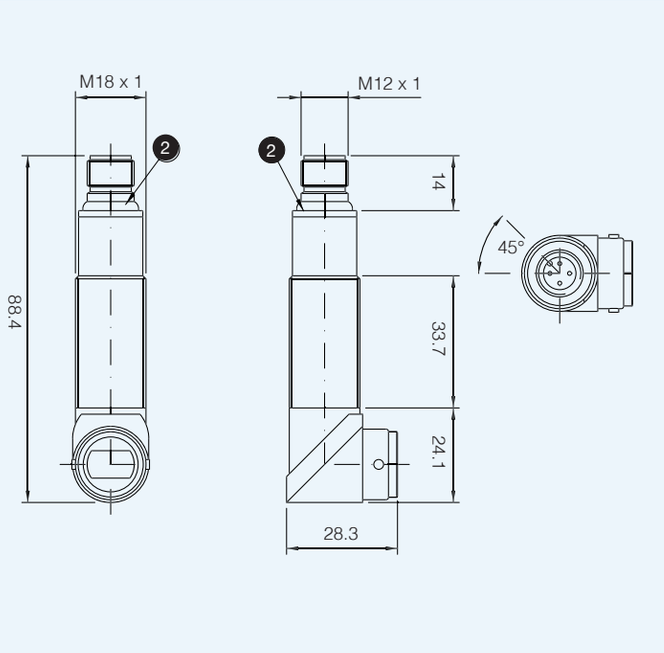

UK1/ - 0AUL**

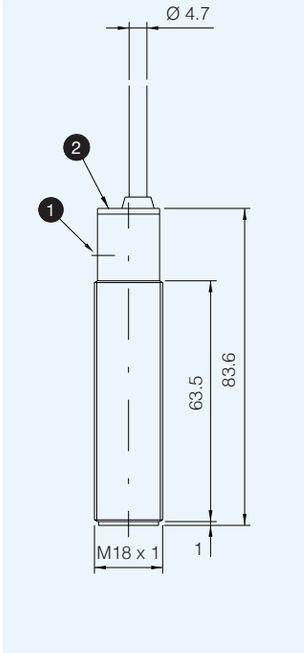

UK1*/ - 0EUL**

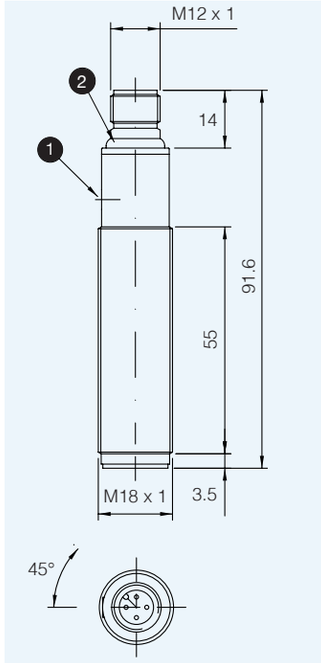

1 Teach-In button 2 LED

dimensions (mm)

accessories included in all plastic models

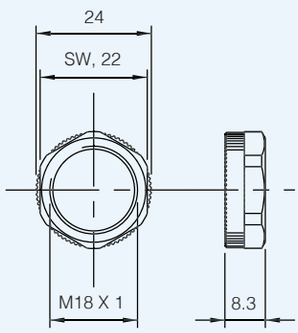

plastic
clamping ring (2x)

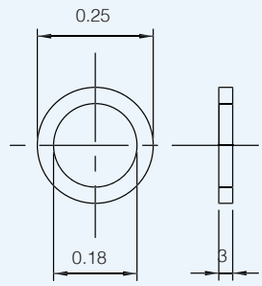

plastic washer (2x)

dimensions (mm)

metallic models

UK1*/** - 1AUL	UK1*/** - 1EUL
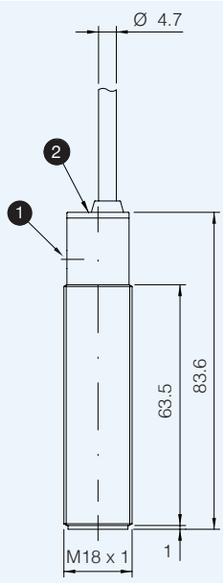	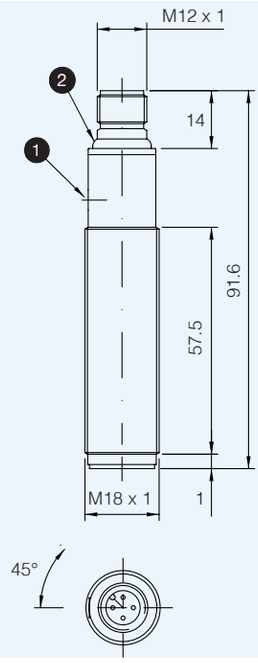

1 Teach-In button 2 LED

dimensions (mm)

accessories included in all metallic models

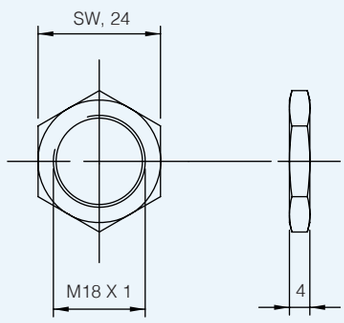

metallic
clamping ring (2x)

UK6 series

M18 cylindrical short body direct diffuse & retro-reflective Ultrasonic Sensor UK6 with Teach-In button

features

- **M18 diffuse sensors with short housing**
- **Digital output**
- **Analogue output**

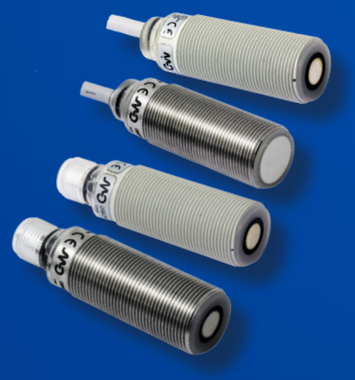

web contents

- **Application notes**
- **Photos**
- **Catalogue / Manuals**

code description

UK [ ] 6 A / H 1 - 0 E UL AN

series	UK	M18 Ultrasonic sensor
function	[ ]	Diffuse models
	R	Retroreflective models
housing type	6	M18 Short housing
nominal sensing distance Sn	A	40...300 mm (diffuse models), 50...300 mm (retroreflective models)
	C	60...800 mm (diffuse models), 80...800 mm (retroreflective models)
	D	80...1,200 mm (diffuse models), 100...1,200 mm (retroreflective models)
adjustment	H	Teach-In by cable
output	1	0...10 V single voltage analogue output
	2	4...20 mA single current analogue output
	P	PNP - NO/NC digital output
	N	NPN - NO/NC digital output
housing materials	0	Axial plastic housing
	1	AISI 316L (DIN 1.4404) stainless steel housing (axial)
cable exit / connector	E	M12 plug cable exit
	A	2 m cable exit
cULus	UL	cULus certified
ATEX	AN	ATEX certified, Cat.3 Zona 2,22 (*)

(*) Only for the PNP plug version.

available models

diffuse models

housing	material	output	distance (mm)	PNP - NO/NC	NPN - NO/NC	analogue output 0...10 V	analogue output 4...20 mA
M18	plasticc	M12	40...300	UK6A/HP-0EUL	UK6A/HN-0EUL	UK6A/H1-0EUL	UK6A/H2-0EUL
			60...800	UK6C/HP-0EUL	UK6C/HN-0EUL	UK6C/H1-0EUL	UK6C/H2-0EUL
			80...1,200	UK6D/HP-0EUL	UK6D/HN-0EUL	UK6D/H1-0EUL	UK6D/H2-0EUL
		cable	40...300	UK6A/HP-0AUL	UK6A/HN-0AUL	UK6A/H1-0AUL	UK6A/H2-0AUL
			60...800	UK6C/HP-0AUL	UK6C/HN-0AUL	UK6C/H1-0AUL	UK6C/H2-0AUL
			80...1,200	UK6D/HP-0AUL	UK6D/HN-0AUL	UK6D/H1-0AUL	UK6D/H2-0AUL

housing	material	output	distance (mm)	PNP - NO/NC	NPN - NO/NC	analogue output 0...10 V	analogue output 4...20 mA
M18	plasticc	M12	40...300	UK6A/HP-1EUL	UK6A/HN-1EUL	UK6A/H1-1EUL	UK6A/H2-1EUL
			60...800	UK6C/HP-1EUL	UK6C/HN-1EUL	UK6C/H1-1EUL	UK6C/H2-1EUL
			80...1,200	UK6D/HP-1EUL	UK6D/HN-1EUL	UK6D/H1-1EUL	UK6D/H2-1EUL
		cable	40...300	UK6A/HP-1AUL	UK6A/HN-1AUL	UK6A/H1-1AUL	UK6A/H2-1AUL
			60...800	UK6C/HP-1AUL	UK6C/HN-1AUL	UK6C/H1-1AUL	UK6C/H2-1AUL
			80...1,200	UK6D/HP-1AUL	UK6D/HN-1AUL	UK6D/H1-1AUL	UK6D/H2-1AUL

available models

retroreflective models

			plastic housing		metal housing	
housing	material	distance (mm)	PNP - NO/NC	NPN - NO/NC	PNP - NO/NC	NPN - NO/NC
M18	M12	50...300	UKR6A/HP-0EUL	UKR6A/HN-0EUL	UKR6A/HP-1EUL	UKR6A/HN-1EUL
		80...800	UKR6C/HP-0EUL	UKR6C/HN-0EUL	UKR6C/HP-1EUL	UKR6C/HN-1EUL
		100...1,200	UKR6D/HP-0EUL	UKR6D/HN-0EUL	UKR6D/HP-1EUL	UKR6D/HN-1EUL
	cable	50...300	UKR6A/HP-0AUL	UKR6A/HN-0AUL	UKR6A/HP-1AUL	UKR6A/HN-1AUL
		80...800	UKR6C/HP-0AUL	UKR6C/HN-0AUL	UKR6C/HP-1AUL	UKR6C/HN-1AUL
		100...1,200	UKR6ADHP-0AUL	UKR6D/HN-0AUL	UKR6D/HP-1AUL	UKR6D/HN-1AUL

technical specification

diffuse models

	UK6A/H*-**	UK6C/H*-**	UK6D/H*-**
nominal sensing distance	300 mm	800 mm	1.200 mm
minimum sensing distance	40 mm	60 mm	80 mm
beam angle	7° ± 2°	8° ± 2°	
switching frequency	8 Hz	5 Hz	5 Hz
operating voltage	10...30 Vdc		
max ripple content	5 %		
output type	PNP or NPN - NO/NC selectable analogue output: 0...10 V - 4...20 mA		
output current	100 mA		
output voltage drop	≤ 2,2 V (@ I = 100 mA)		
no-load supply current	≤ 35 mA @ Val = 30 V		
leakage current	≤ 10 µA @ 30 V		
power on delay	≤ 100 ms		
temperature range	-20°C...+70°C		
temperature drift of Sr	≤ 5 %		
short-circuit protection	● (autoreset)		
induction protection	●		
voltage reversal protection	●		
weight	plastic version: 65 g connector / 75 g cable metallic housing: 80 g connector / 140 g cable		
LEDs	yellow: output green: aligment		
protection degree	IP67		
EMC	IEC60947-5-2		
housing material	plastic housing: PTB metal housing: AISI316L		
active head material	epoxy - glass resin		
connection	M12 plug cable exit 2 m cable exit		

(1) metallic target 100 x 100
(2) metallic target 200 x 200

technical specification

	UK6RA/H-**	UKR6C/H*-**	UKR6D/H*-**
			
nominal sensing distance	300 mm	800 mm	1,200 mm
detection distance Sr	270 mm	720 mm	1,080 mm
minimum distance from background	50 mm	80 mm	100 mm
beam angle	7° ± 2°	8° ± 2°	
switching frequency	8 Hz	5 Hz	3 Hz
operating voltage	10...30 Vdc		
max ripple content	5 %		
output type	PNP or NPN - NO/NC selectable		
output current	100 mA		
output voltage drop	≤ 2,2 V (@ I = 100mA)		
no-load supply current	≤ 35 mA @ Val = 30 V		
leakage current	≤ 10 µA @ 30 V		
power on delay	≤ 100 ms		
temperature range	-20°C...+70°C		
temperature drift of Sr	≤ 5 %		
short-circuit protection	● (autoreset)		
induction protection	●		
voltage reversal protection	●		
weight	65 g plastic version / 80 g metallic version		
LEDs	yellow: output green: aligment		
protection degree	IP67		
EMC	IEC60947-5-2		
housing material	plastic housing: PTB metal housing: AISI316L		
active head material	epoxy - glass resin		
connection	M12 plug cable exit 2 m cable exit		

electrical diagrams of connections

models with single analogue output	PNP NO/NC models	NPN NO/NC models

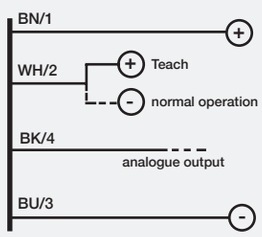

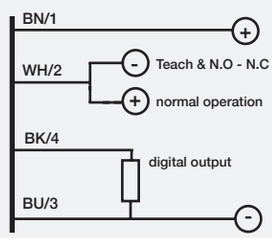

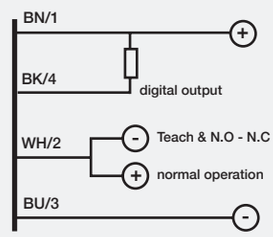

BN	brown
BU	blu
BK	black
WH	white

connector

M12 UK6*/**-**

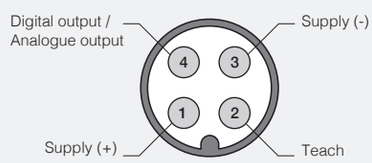

available outputs

models with single digital output

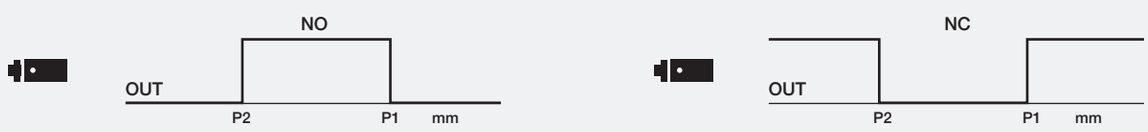

models with single analogue output

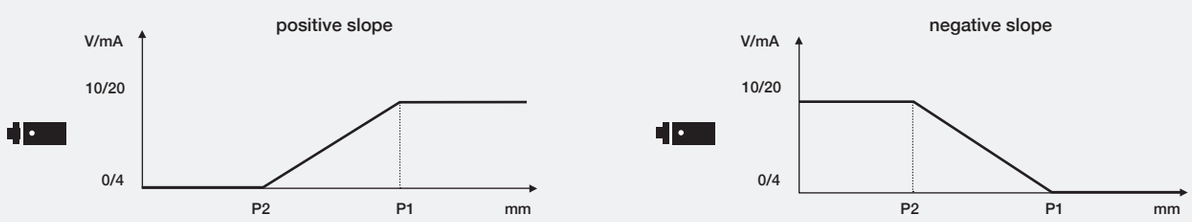

response diagrams

direct diffuse models

UK6A/**-** parallel displacement

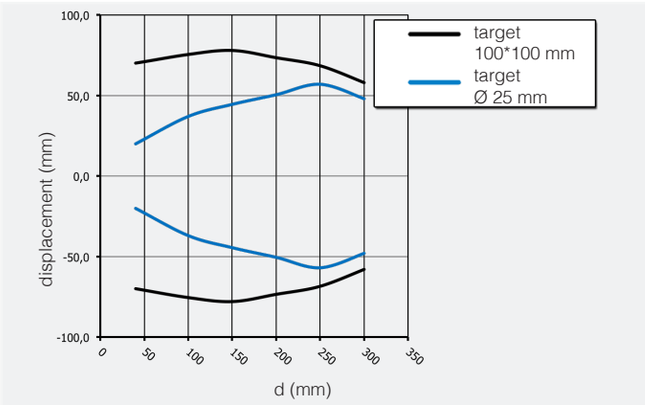

UK6C/**-** parallel displacement

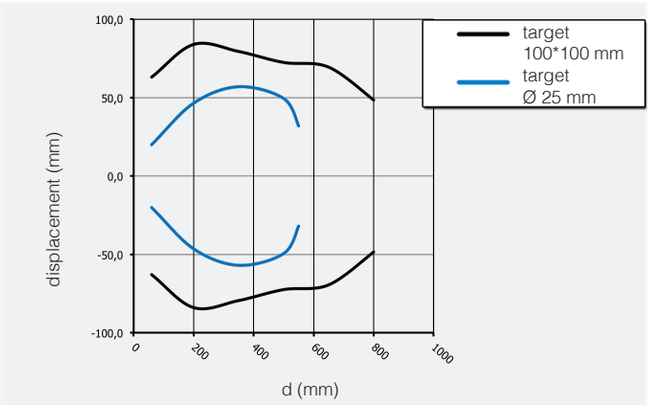

UK6D/**-** parallel displacement

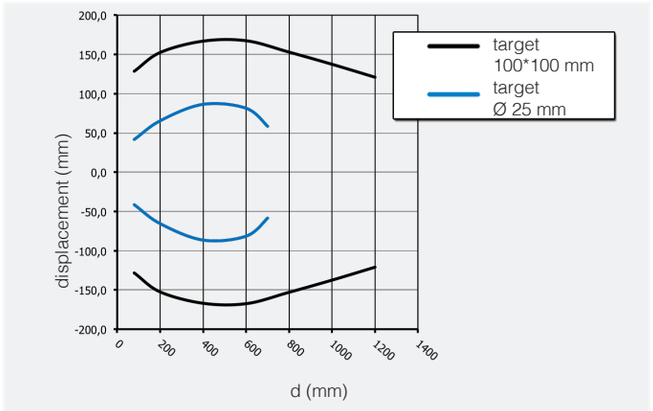

response diagrams

retro-reflective models

UK6RA/-** parallel displacement**

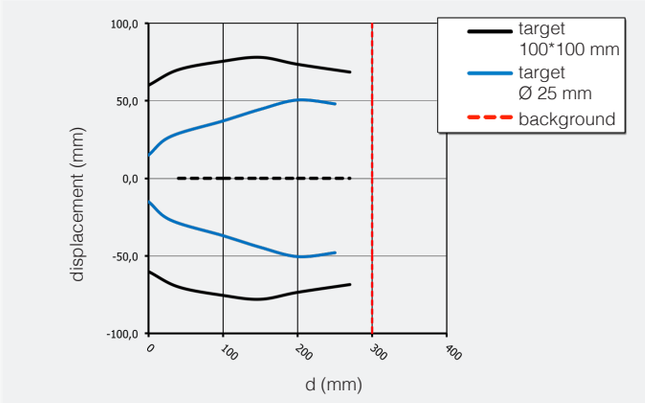

UK6RC/-** parallel displacement**

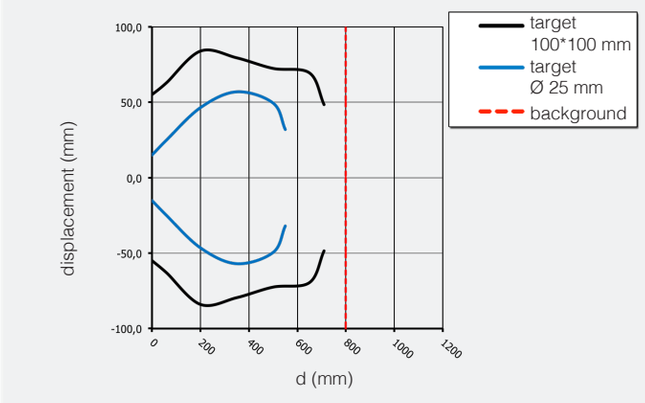

UK6RD/-** parallel displacement**

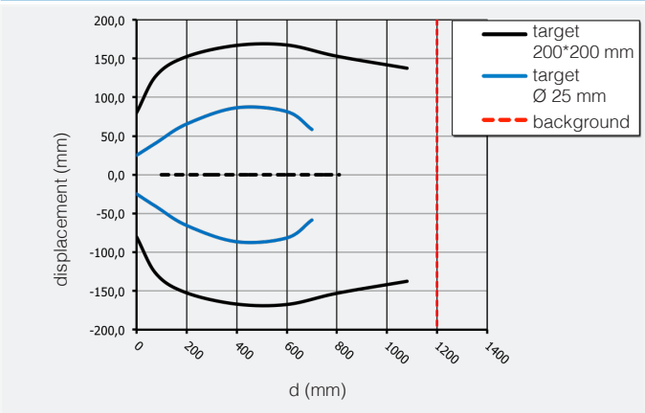

adjustment

Reflector detection (Sd)

Install the sensor in the correct position. Install the background (any solid, flat, fixed surface) perpendicularly to the sensor's axes. Connect the Teach-in wire to +24V (PNP models) or to 0V (NPN models) for 2 sec. Yellow LED blinks for 5 times, after that, the sensor acquires the background position (Sd distance).

NO/NC selection

Connect the Teach-in wire to +24V (PNP models) or to 0V (NPN models) for a time > 8 sec. Yellow LED blinks quickly until the teach-in wire is released, then 5 blinks confirm the change of working state. The sensor change its working mode from NO to NC and vice versa.

Operating distance (Sr)

The effective operating distance (Sr) is equivalent to background diastance (Sd) decreases of 10%. This hysteresis allows the correct detection of the target even if the background is vibrating during the machine normal operations.

dimensions (mm)

UK6*/** - *AUL	UK6*/** - *EUL
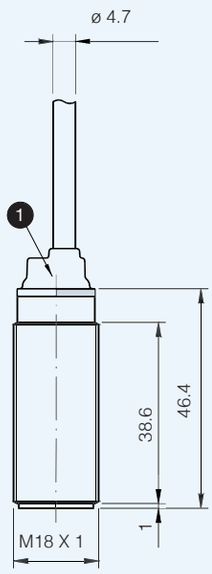	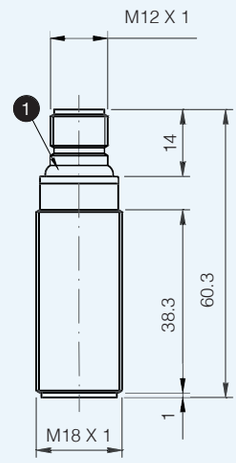

1 LED

dimensions (mm)

accessories included in all plastic models

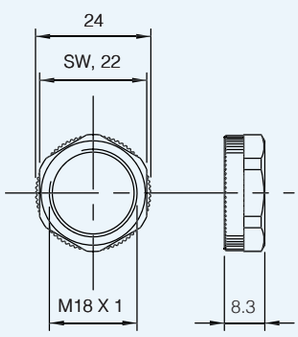

plastic
clamping ring (2x)

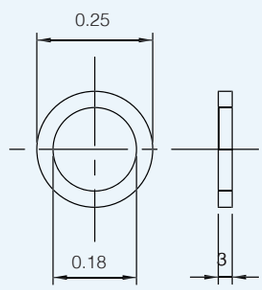

plastic washer (2x)

dimensions (mm)

accessories included in all metallic models

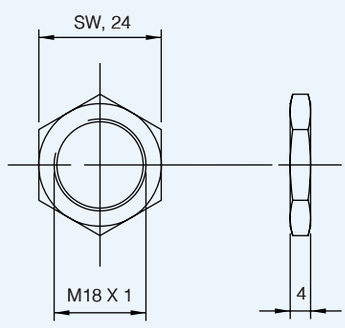

metallic
clamping ring (2x)

UT and UTR series

M30 cylindrical direct diffuse & retro-reflective
Ultrasonic Sensor with Teach-In button

features

- **M30 ultrasonic sensor with standard housing and with large front with high performances and high sensing distances**
- **Adjustable hysteresis function: models with double digital programmable output specific for level detection**
- **Models with voltage or current output: programmable slope to optimize resolution**
- **Adjustable working area (window mode or object mode) by Teach-in button on all models for a quick and easy installation**
- **Two multifunction LEDs: orange LED for adjustment procedure and output type and green LED for target alignment**
- **Plastic and AISI 316L stainless steel housing, plug M12 or cable exit 4 pin**

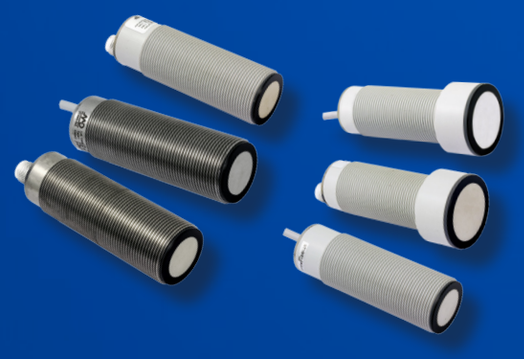

M30 with Teach-In button

web contents

- **Application notes**
- **Photos**
- **Catalogue / Manuals**

code description(*)

UT ■ 1 B / E 1 - 0 E UL

series	UT	M30 Ultrasonic Sensor
function	■	Direct diffuse models
	R	Retroreflective models
housing type	1	Standard housing
	2	Large front transducer, Ø 38.8 mm
nominal sensing distance Sn	B	250 - 3,500 mm direct diffuse/350 - 3,500 metallic housing
	F	350 – 6,000 mm direct diffuse
adjustment	E	Sensitivity adjustment and NO/NC selection by Teach-in button
output	1	0...10 V single voltage analogue output
	2	4...20 mA single current analogue output
	P	PNP - NO/NC digital output
	N	NPN- NO/NC digital output
	W	PNP two digital outputs with standard window and adjustable hysteresis functions (**)
	M	NPN two digital outputs with standard window and adjustable hysteresis functions (**)
	6	PNP - NO/NC digital output + 4 ... 20 mA current analogue output
	4	NPN - NO/NC digital output + 4 ... 20 mA current analogue output
	7	PNP - NO/NC digital output + 0 ... 10 V voltage analogue output
	9	NPN - NO/NC digital output + 0 ... 10 V voltage analogue output
housing materials	0	Axial plastic housing
	1	Axial AISI 316L (DIN 1.4404) stainless steel housing
cable exit / connector	E	M12 plug cable exit
	A	2 m cable exit
cULus	UL	With cULus certification

(*) Models with syncronization available (**) Sensitivity adjustment and status selection available by external Teach-In.

available models

cULus certified

housing	distance (mm)	output	analogue output 0...10 V	analogue output 4...20 mA	1 x PNP - NO/NC	1 x NPN - NO/NC
plastic	3,500 mm	M12	UT1B/E1-0EUL	UT1B/E2-0EUL	UT1B/EP-0EUL	UT1B/EN-0EUL
		cable	UT1B/E1-0AUL	UK1B/E2-0AUL	UT1B/EP-0AUL	UT1B/EN-0AUL

available models

cULus certified - Double digital output

housing	distance (mm)	output	2 X PNP (adjustable hysteresis + standard window MD)	2 X NPN (adjustable hysteresis + standard window MD)
plastic	3,500 mm	M12	UT1B/EW-0EUL	UT1B/EM-0EUL
		cable	UT1B/EW-0AUL	UK1B/EM-0AUL
AISI316L		M12	UT1B/EW-1EUL	UT1B/EM-1EUL
		cable	UT1B/EW-1AUL	UT1B/EM-1AUL
plastic	6,000 mm	M12	UT2F/EW-0EUL	UT2F/EM-0EUL
		cable	UT2F/EW-0AUL	UT2F/EH-0AUL

available models

cULus certified - Double mixed output (digital + analogue)

housing	distance (mm)	output	1 x PNP - NO/NC + 4...20 mA	1 x NPN - NO/NC + 4...20 mA	1 x PNP - NO/NC + 0...10 V	1 x NPN - NO/NC + 0...10 V
plastico	3,500 mm	M12	UT1B/E6-0EUL	UT1B/E4-0EUL	UT1B/E7-0EUL	UT1B/E9-0EUL
		cable	UT1B/E6-0AUL	UT1B/E4-0AUL	UT1B/E7-0AUL	UT1B/E9-0AUL
acciaio inox AISI 316L		M12	UT1B/E6-1EUL	UT1B/E4-1EUL	UT1B/E7-1EUL	UT1B/E9-1EUL
		cable	UT1B/E6-1AUL	UT1B/E4-1AUL	UT1B/E7-1AUL	UT1B/E9-1AUL
plastico	6,000 mm	M12	UT2F/E6-0EUL	UT2F/E4-0EUL	UT2F/E7-0EUL	UT2F/E9-0EUL
		cable	UT2F/E6-0AUL	UT2F/E4-0AUL	UT2F/E7-0AUL	UT2F/E9-0AUL

technical specification (cULus certified)

	UT1B/E*-**UL	UT2F/E*- 0*UL
maximum sensing distance	3,500 mm [1]	6,000 mm [2]
minimum sensing distance	250 mm / 350 mm metallic housing	350 mm
sensing range (Sd)	250...3.500 mm (plastic) / 350...3.500 mm (metallic)	350...6.000 mm
beam angle	± 7°	± 9°
switching frequency (digital output)	2 Hz / 1 Hz metallic housing	1 Hz
response time (digital output)	250 ms	500 ms
response time (analogue output)	600 ms	600 ms
hysteresis	1 % off full scale value	
repeatibility	1 % off full scale value	0.5 % off full scale value
resolution	4 mm	6 mm
linearity error	1 % off full scale value	
temperature range	- 20°C...+ 70°C	
temperature compensation	●	
operating voltage	12 - 30 Vcc; 15 - 30 Vcc: for model with analog voltage output (0 - 10 V)	
temperature drift	± 8 % (digital output); ± 5 % (analogue output)	
ripple	5 %	
leakage current	≤ 10 µA @ 30 Vcc	
output voltage drop	2.2 V max. (IL = 100 mA)	
no-load supply current	≤ 50 mA	
output current (digital output)	100 mA	
minimum load resistance (analog voltage output)	3 k Ω	
set point adjustment	Teach-In button	
power on delay	≤ 500 ms (digital output)	
power on delay	≤ 900 ms (analogue output)	
power supply protections	polarity reversal, transient	
digital output electrical protection	short circuit (auto reset), overvoltage pulses	
analog output electrical protections	overvoltage pulses	
EMC	conforming to EMC Directive, according to EN 60947-5-2	
protection degree	IP67 (EN60529); NEMA 4X[3]	IP67 (EN 60529) [3]
housing material	PBT/AISI 316L	PBT
active head material	epoxy-glass resin	
tightening torque	1.5 Nm (plastic housing) / 100 Nm (metallic housing)	1.5 Nm
weight	plastic version: 140 g connector / 200 g cable metallic version: 215 g connector / 220 g cable	170 g connector / 300 g cable
storage temperature	- 35°C...+ 70° without freeze	

[1] Metallic target 200 x 200 mm [2] Metallic target 400 x 400 [3] Protection guarantee only with plug cable well mounted

available models

retroreflective models M30

housing	function	portata (mm)	output	PNP - NO/NC	NPN - NO/NC
plastic	retroreflective	250…3,500	M12	UTR1B/EP-0EUL	UTR1B/EN-0EUL
		350...6,000		UTR2F/EP-0EUL	UTR2F/EN-0EUL
		250...3,500	cable	UTR1B/EP-0AUL	UTR1B/EN-0AUL
		350...6,000		UTR2F/EP-0AUL	UTR2F/EN-0AUL

technical specification (cULus certified)

	UTR1B/E*-0*	UTR2F/E*-0*
		
nominal sensing distance Sn	3,500 mm [1]	6,000 mm [2]
reflector minimum sensing distance	250 mm	350 mm
beam angle	± 7°	± 8°
switching frequency	1 Hz	1 Hz
operating voltage	15 - 30 Vdc	
max. ripple content	5 %	
output type	PNP o NPN NO/NC selectable	
output current	100 mA	
output voltage drop	≤ 2.2 V (@ I = 100mA)	
no-load supply current	≤ 50 mA @ Val=24V	
leakage current	≤ 10 µA @ 30V	
power on delay	≤ 500 ms	
temperature range	-20°C...+70°C	
temperature drift of Sr	≤ 5 %	
short-circuit protection	● (autoreset)	
induction protection	●	
voltage reversal protection	●	
LEDs	yellow: output green: alignment	
protection degree	IP67	
EMC	conforming to EMC Directive according to EN 60947-5-2	
housing material	PBT	
active head material	epoxy glass resin	
connection	M12 plug cable exit, 2 m cable exit	

[1] Metallic target 200 x 200 mm [2] Metallic target 400 x 400 mm [3] Protection granted only by plug mounted in a correct way

electrical diagrams of connections

PNP NO/NC + analogue output

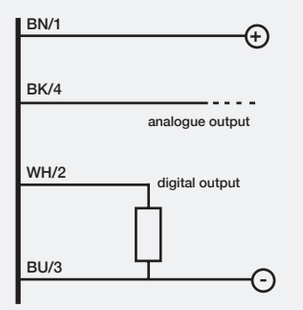

models with double PNP output

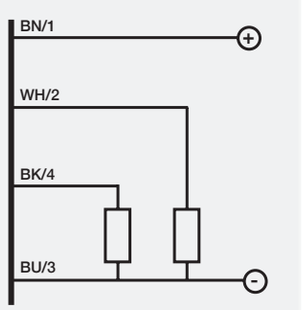

models with PNP NO/NC single output

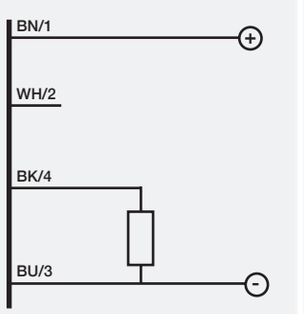

models with single analogue output

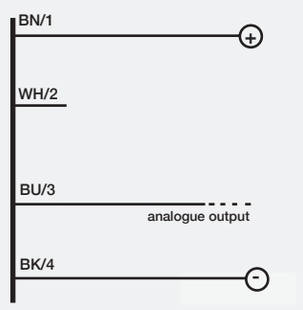

NPN NO/NC models + analogue output

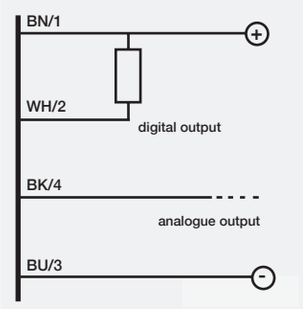

models with NPN double digital output

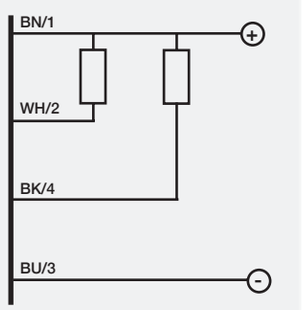

models with NPN NO/NC single output

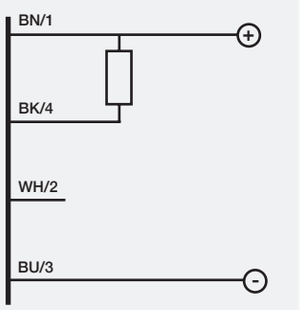

BN	brown
BU	blu
BK	black
WH	white

plugs

M12 UT**/E4 - EUL UT**/E7 - EUL UT**/E6 - EUL UT**/E9 - EUL

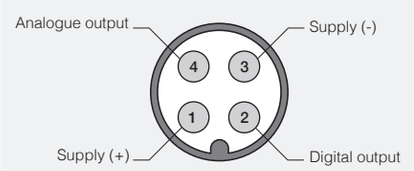

M12 UT**/EM - EUL UT**/EW - EUL

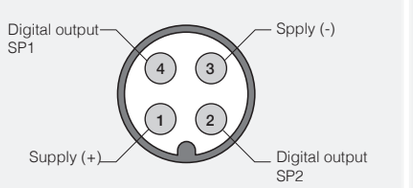

M12 UT**/E1 - EUL UT**/EP - EUL UT**/E2 - EUL UT**/EN - EUL

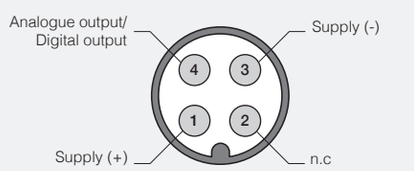

response diagrams

direct diffuse models

parallel displacement UT1B/**-**

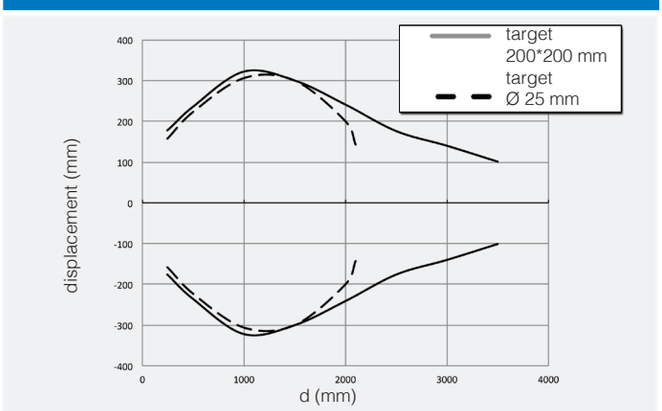

parallel displacement UT2F/**-**

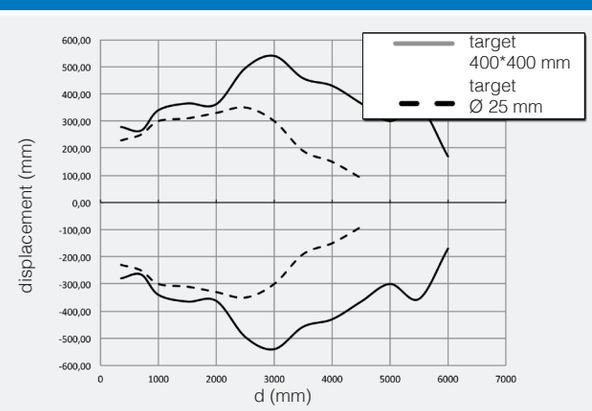

response diagrams

retroreflective models

parallel displacement UTR1B/-****

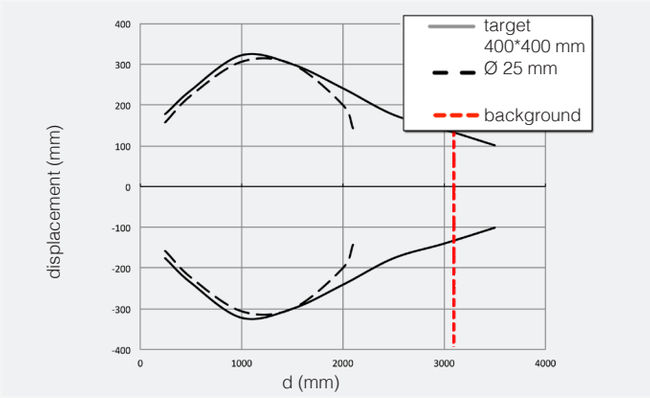

parallel displacement UTR2F/-****

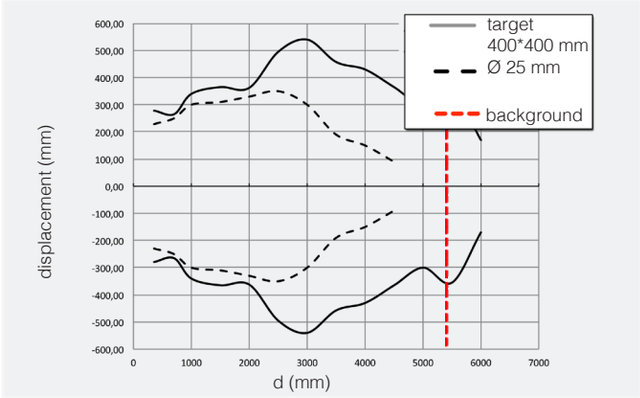

available outputs

models with single digital output

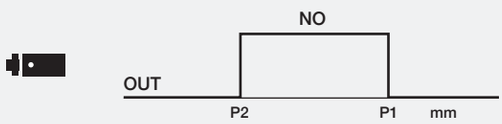

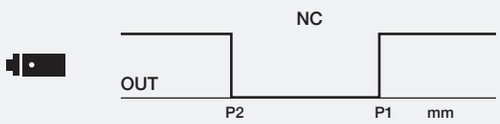

models with single analogue output

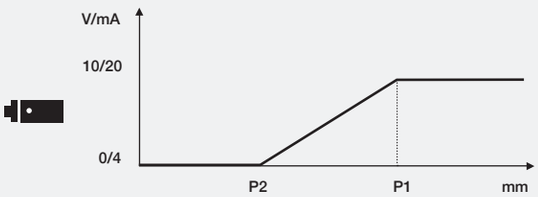

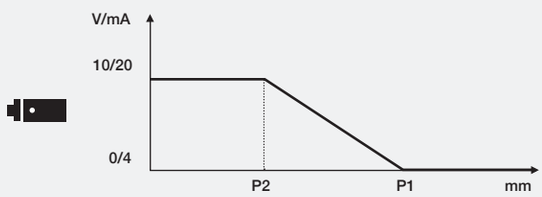

models with digital output + analogue output [1]

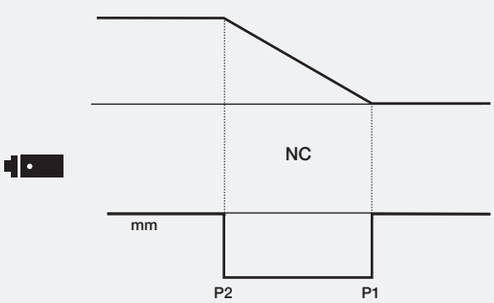

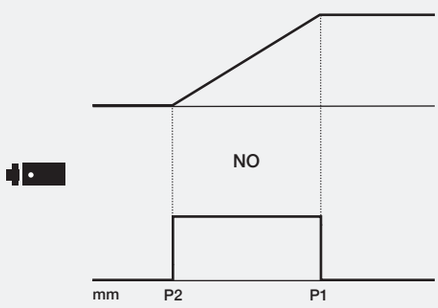

models with double output, hysteresis + standard window [2]

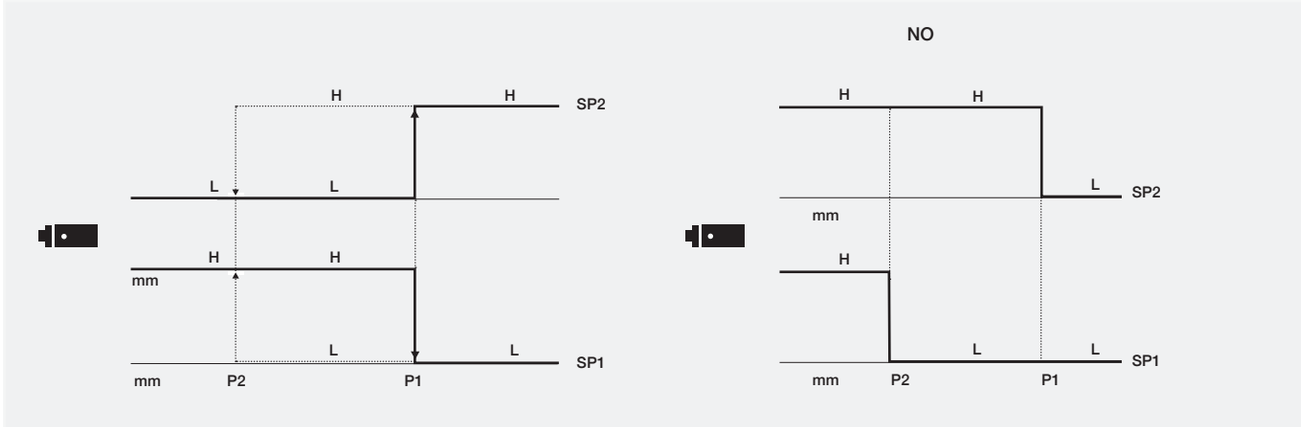

[1] Suitable, also, as single model output.

[2] In the double digital output model with the standard window and adjustable hysteresis functions if the target is removed from sensor detection range, the output type switches. These models are not forseen with NO/NC function.

P1	maximum selected working distance and first point to select
P2	minimum selected working distance and second point to select

dimensions (mm)

plastic models

UT1B*/** - 0AUL

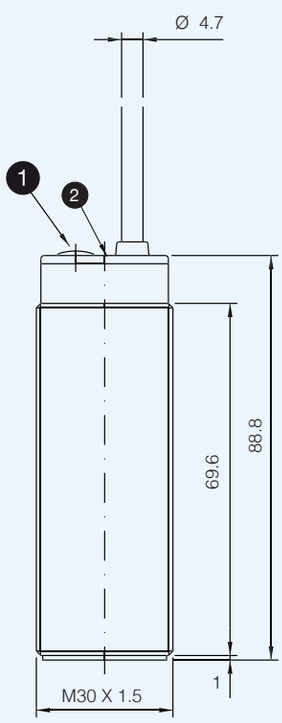

UT1B*/** - 0EUL

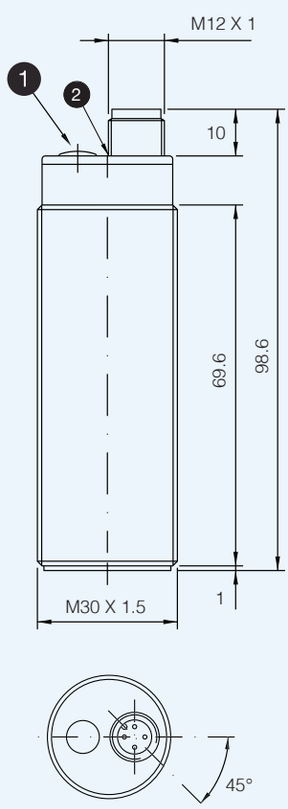

dimensions (mm)

metallic models

UT1B*/** - 1AUL

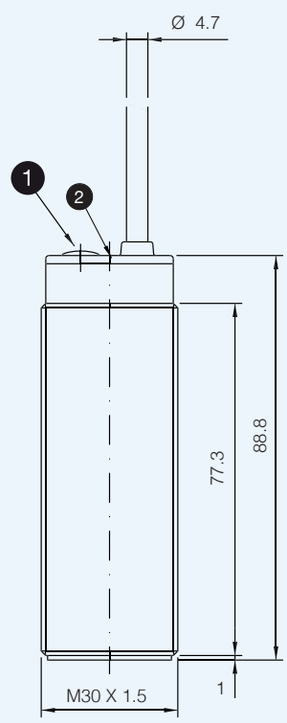

UT1B*/** - 1EUL

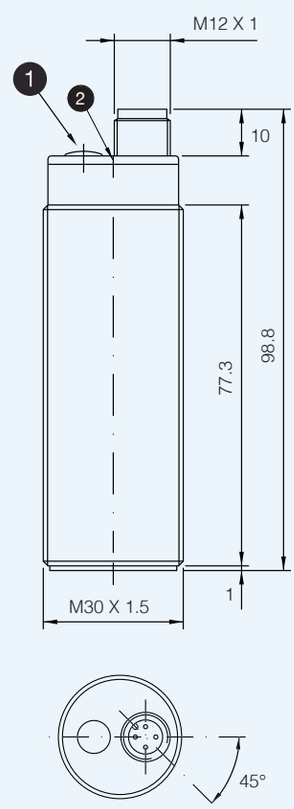

1 Teach-In button 2 LED

dimensions (mm)

accessories included in all metallic models

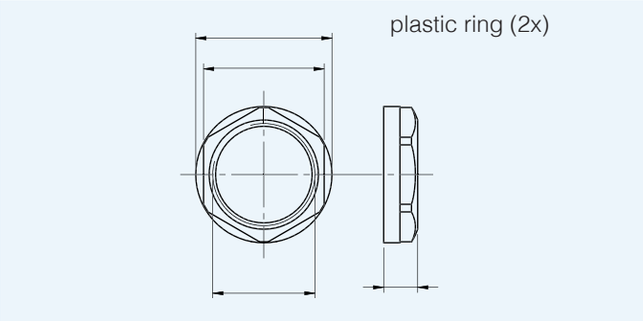

dimensions (mm)

accessories included in all metallic models

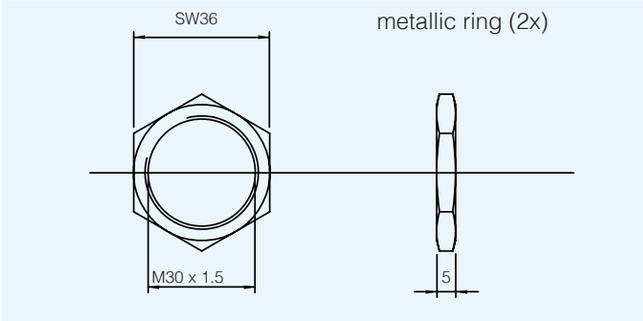

dimensions (mm)

plastic models

UT2F*/ - 0AUL**

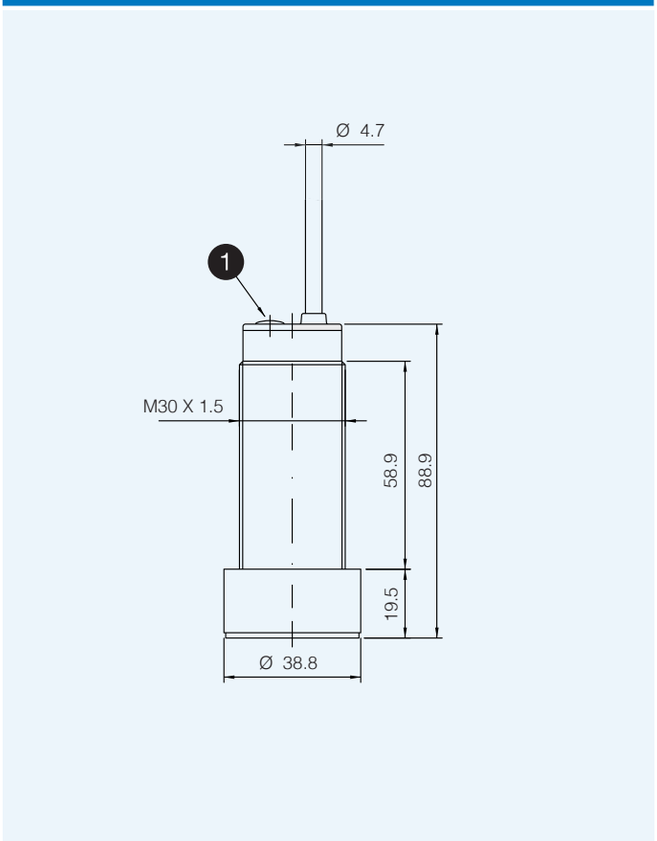

UT2F*/ - 0EUL**

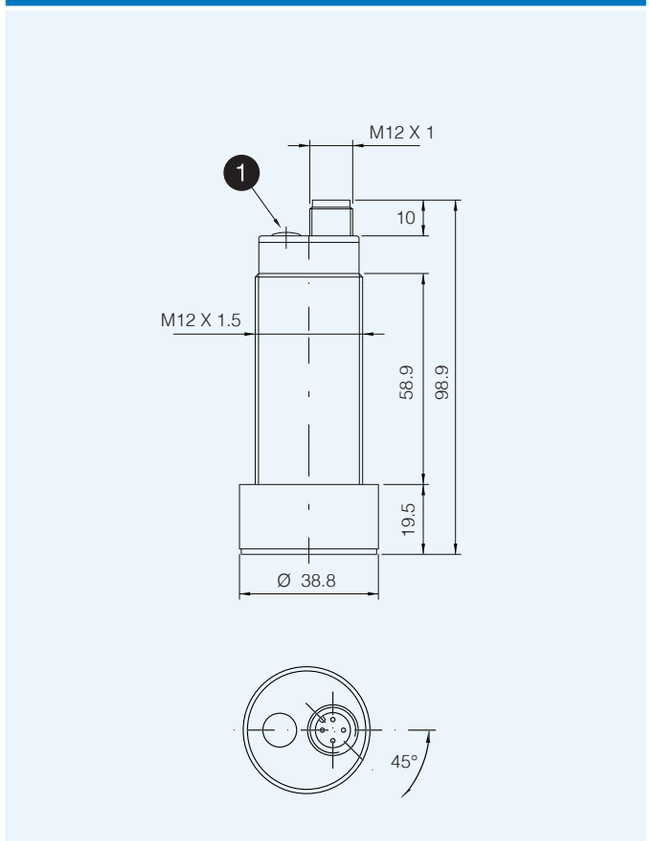

1 Teach-In button

dimensions (mm)

accessories included in all metallic models

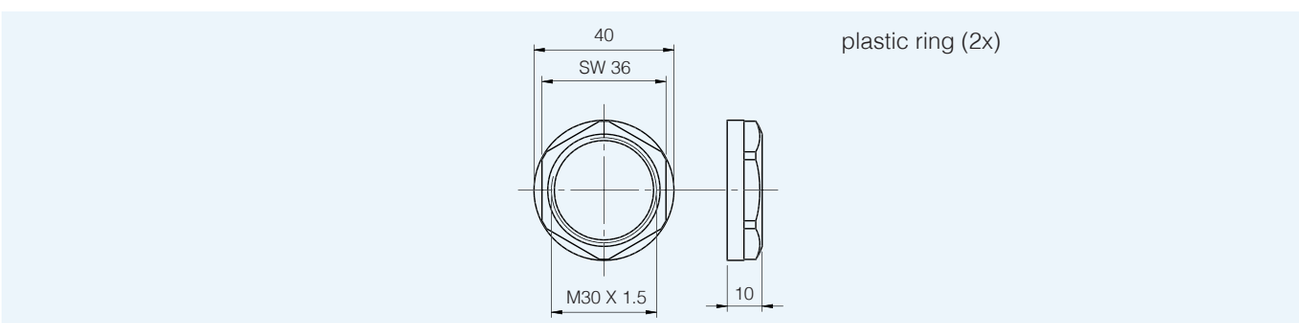

UH series

Cubic through beam ultrasonic sensors

features

- **Total protection against any type of electric damages**
- **Plastic housing**
- **IP67 protection degree**
- **Approvals: CE**

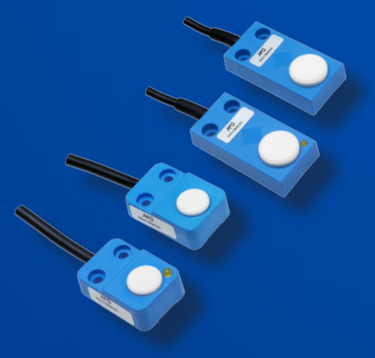

web contents

- **Application notes**
- **Photos**
- **Catalogue / Manuals**

code description

UHZ / AP - 0A

series	UH	Through beam cubic ultrasonic sensor
nominal sensing distance Sn	Z	0...300 mm sensing distance
	S	0...1,100 mm sensing distance
output	A	NO output type
	C	NC output type
output	P	PNP output logic
	N	NPN output logic
housing type	0	Plastic housing
cable exit	A	Cable exit

available models

dimension	distance (mm)	output	NO - PNP	NO - NPN	NC - PNP	NC - NPN
20 x 30 x 15 mm	0...300 mm	cavo	UHZ/AP-0A	UHZ/AN-0A	UHZ/CP-0A	UHZ/CN-0A
24 x 50 x 15 mm	0...1,100 mm		UHS/AP-0A	UHS/AN-0A	UHS/CP-0A	UHS/CN-0A

technical specifications

	UHZ/**- 0A	UHS/**- 0A
maximum sensing distance	300 mm	1,100 mm
minimum sensing distance	0 mm	
sensing range (Sd)	250...3,500 mm	350...6,000 mm
beam angle	± 8° ± 9°	
switching frequency (digital output)	500 Hz	
response time (digital output)	1 ms 500 ms	
emission frequency	300 kHz	180 kHz
repeatibility	-	
linearity error	-	
temperature range	- 15°C...+ 60°C	
temperature compensation	- 25°C...+ 75° C	
operating voltage	●	
temperature drift	-	
ripple	<10 %	
leakage current	< 10 µA	
output voltage drop	-	
no-load supply current	<40 mA	
output current	PNP o NPN - NO o NC	
minimum load resistance	< 2.5 V	
maximus load resistance	500 mA	
set point adjustment	-	
power on delay	<200 ms	
power supply protections	polarity reversal, overvoltage pulses	
digital output protections	short circuit autoreset	
LEDs	yellow (output activated)	
EMC	conforming to EMC Directive, according to EN 60947-5-2	
protection degree	IP67 (EN60529)	
housing material	PBT	
active head material	ceramics	
tightening torque	-	
weight	150 g	100 g
storage temperature	-	

Specifications are guaranteed only using emitter and receiver with the same serial number. Attention: do not expose sensor head to hot water (>50°C) or water steam.

electrical diagrams of connections

emitter	receiver PNP	receiver NPN
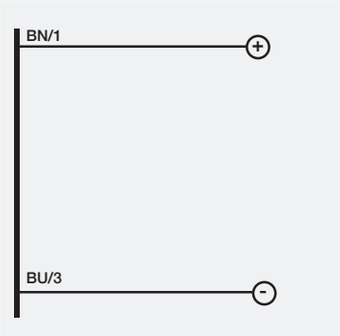	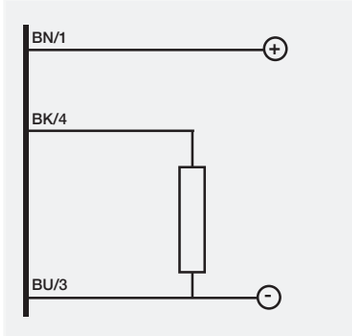	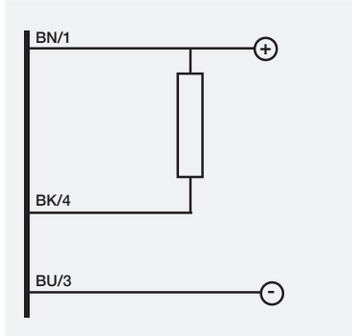

BN	brown
BU	blu
BK	black
WH	white

dimensions (mm)

UHZ*/** - 0A (receiver)	UHZ/** - 0A (emitter)
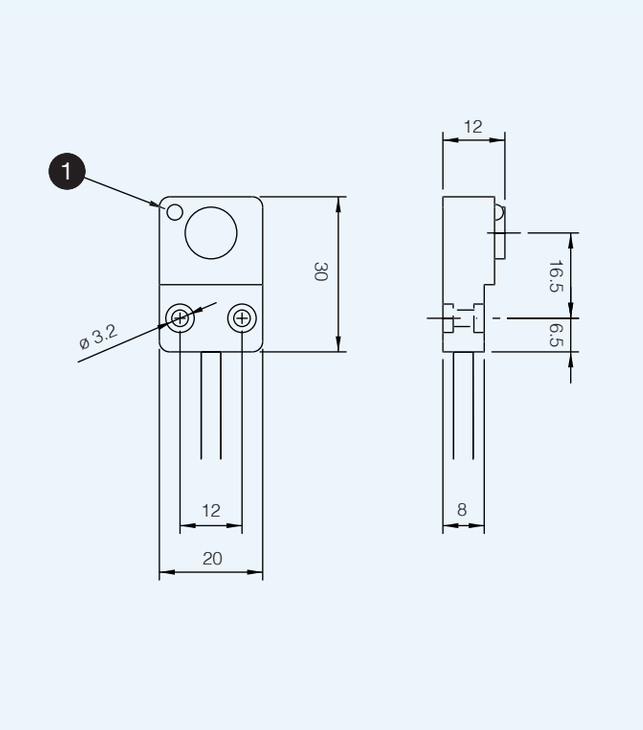	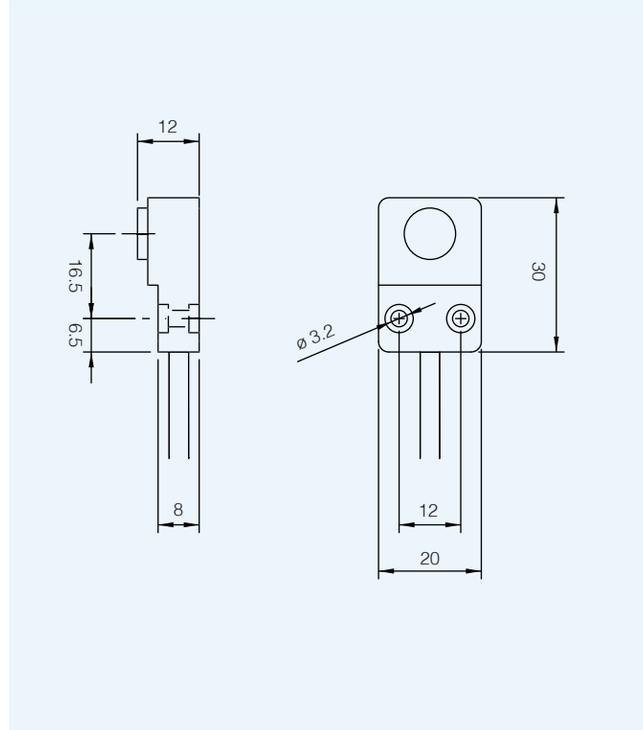

1 LED

dimensions (mm)

UHS*/** - 0A (receiver)	UHS*/** - 0A (emitter)
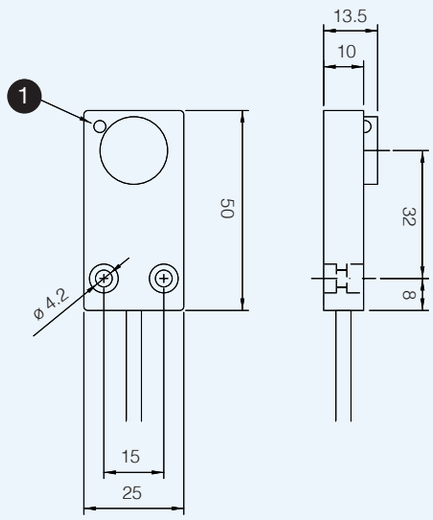	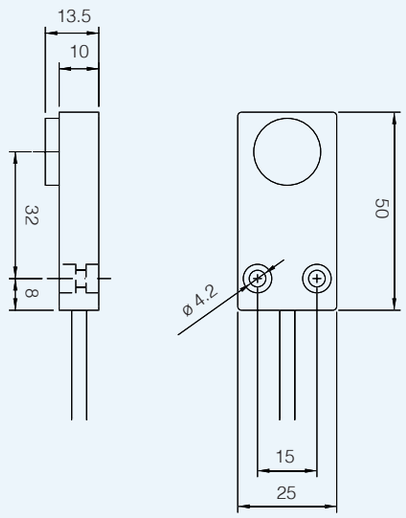

1 LED

QU series

Cubic through beam high range
Ultrasonic Sensors

features

- **Working area adjusting by external Teach-In to avoid tampering of the sensing distance**
- **Current or voltage analogue output**
- **Complete protection against electrical damages**
- **Plastic housing**
- **IP65 protection degree**
- **Approvals: CE**

web contents

- **Application notes**
- **Photos**
- **Catalogue / Manuals**

code description

QU 6 / D 1 - 0 E

series	QU	Cubic Ultrasonic Sensor
nominal sensing distance Sn	6	600...6,000 mm
	D	Sensitivity adjustment by external Teach-In
output	1	0...10 V voltage analogue output
	2	4...20 mA current analogue output
housing type	0	Plastic housing
cable output	E	M12 plug cable exit

available models

dimension (mm)	distance (mm)	output	analogue output 0...10 V	digital output 4...20 mA
80 x 67 x 50	600...6,000	connettore M12	QU6/D1- 0E	QU6/D2- 0E

technical specifications

	QU6/D1- 0E	QU6/D2- 0E
maximum sensing distance	6,000 mm	
minimum sensing distance	600 mm	
beam angle	± 8° ± 9°	
switching frequency (digital output)	-	
response time (digital output)	700 ms	
hysteresis	-	
repeatibility	0.2 % ± 2 mm	
linearity error	< 0.5 %	
temperature range	- 20°C...+ 70°C	
temperature compensation	●	
operating voltage	15 - 30 Vcc	
temperature drift	< 1 %	
ripple	< 10%	
leakage current	< 10 µA	
no-load supply current	< 30 mA	
output current (digital output)	0...10 V	4...20 mA
output current (anlogue output)	< 5 mA	-
maximus load resistance	-	
set point adjustment	Teach-In button	
power on delay	<1 s	
power supply protections	polarity reversal, transient	
digital output protections	short circuit (auto reset)	
analogical output protections	-	
EMC	conforming to EMC Directive, according to EN 60947-5-2	
protection degree	IP67 (EN60529) (1) IP67 (EN 60529) (3)	
housing material	PBTP PBT	
active head material	ceramics	
weight	450 g	

(1) Protection guaranteed only with plug cable well mounted

Valid for room temperature 25°C
Attention: do not expose sensor head to hot water (> 50°C) or water steam

electrical diagrams of connections

QU6/D*- 0E**

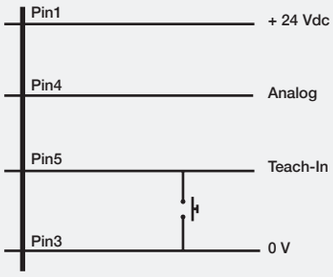

plug

M12 QU6/D*- 0E**

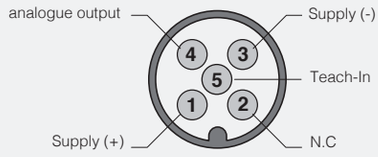

available output

models with voltage analogue output	models with current analogue output

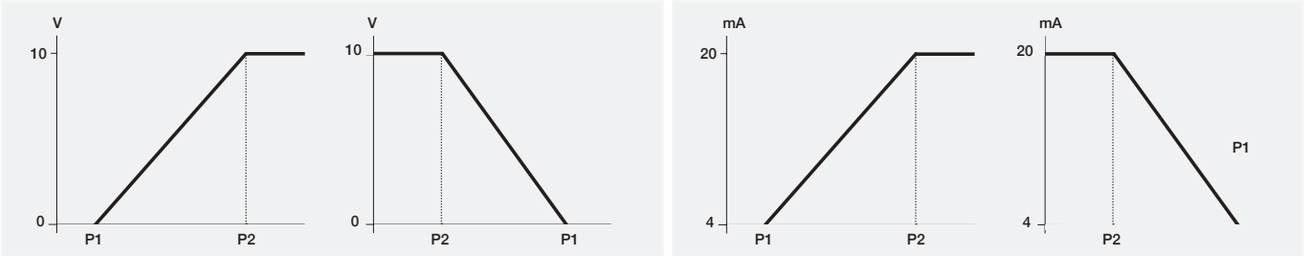

P1 e P2 are the switching points set through the Teach-In cable (pin5). The analogue output is on pin4, linear between P1 e P2. By suitably setting P1 and P2, it is possible to select a positive or negative ramp and the NC or NO status of the output.

curve di risposta

parallel displacement QU6/-****

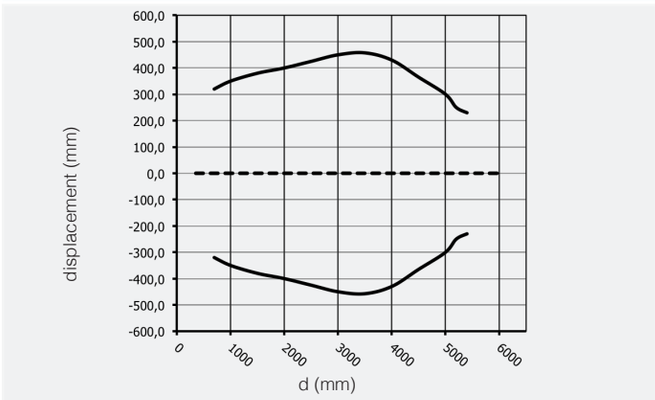

dimensions (mm)

QU6/-****

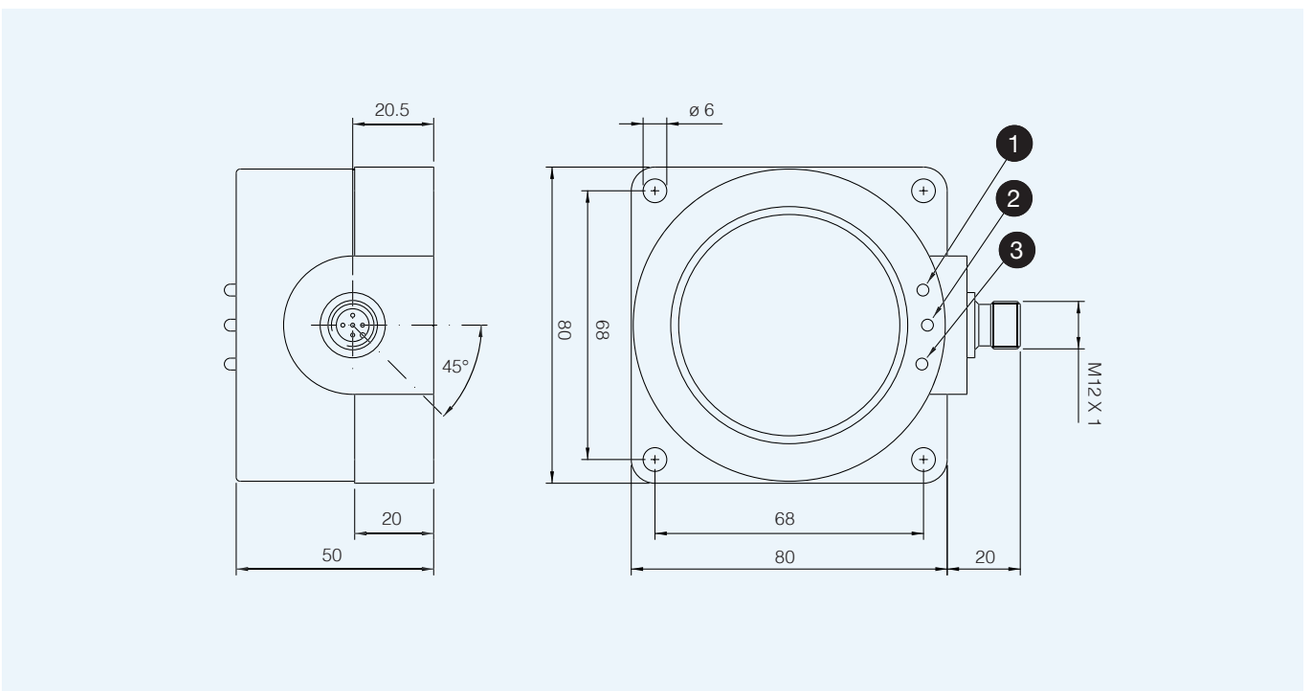

1 P2 2 P1 3 ECHO

notes

FC8 series

Ultrasonic fork sensors for label detection

features

- **Ultrasonic fork sensor for transparent labels, any opaque material with connector M8 4-pole**
- **Teach-in models with dynamic and remote teach**
- **Ultrasonic technology**
- **Small size easy to locate; aluminum case**
- **NPN and PNP, Lo/Do total configurable**
- **Width slit detection 3 mm; depth slit detection 69 mm**
- **Maximum switching frequency 1.500 Hz**

Ultrasonic fork sensors

web contents

- **Application notes**
- **Photos**
- **Catalogue / Manuals**

code description

FC8 U / 0 P - M3 07 - 1 F

series	FC8	Ultrasonic fork for labels
technology	U	Ultrasonic
output	0	Lo/Do output selectable, remote teach
PNP / NPN output	P	PNP digital output
	N	NPN digital output
width	M3	Width slit detection 3 mm
depth	07	Depth slit detection 69 mm
housing	1	Metal housing - aluminium
plug	F	M8 plug 4 pin

available models

supply	installation	PNP	NPN	NPN / PNP
12...24 Vdc	M8 4 pins	FC8U/0P-M307-1F	FC8U/0N-M307-1F	FC8U/0B-M307-1F

technical specification

	FC8U/0*-M307-1F
nominal sensing distance	3 mm
minimum length of label	2 mm
minimum sensing distance between 2 labels	2 mm
slot depth detection	69 mm
slot lenght detection	-
emission	ultrasonic
maximum flow rate	180 m/min
detection accurancy	+/- 0,20 um at 120 m/min
rated operational voltage	12 … 24 Vdc (with protection against reverse polarity)
max ripple content	10%
no-load supply current	45 mA
load current	100 mA
output voltage drop	≤ 2 V @ IL = 100 mA
switching frequency	1.500 kHz
power on delay	300 us
power supply protections	short-circuit output protected interference suppression
operation temperature range	+ 5 ...+55 °C
storage temperature	- 20 ...+70 °C
protection degree	IP65, IEC (EN60529)
housing material	painted aluminium
connection	M8 4 pins
weight approx.	160 g

electrical diagrams of the connections

PNP	NPN	NPN / PNP

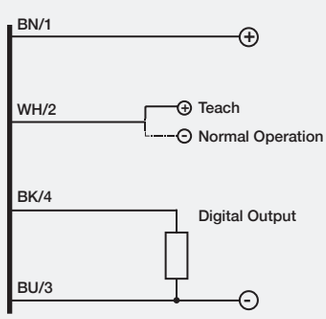

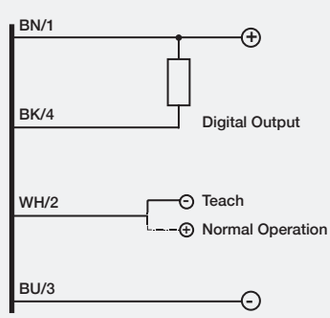

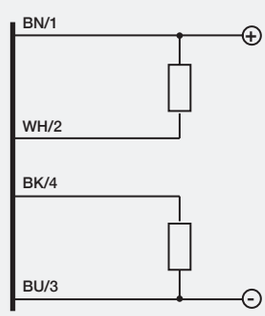

BN	brown
BU	blue
BK	black
WH	withe
PK	pink
GY	gray

plug

M8 FC8/**-**-**	M8 FC8/0B-**-**
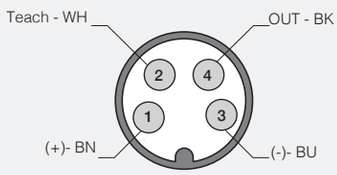	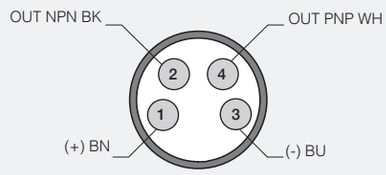

dimensions (mm)

FC8U/**-**-**

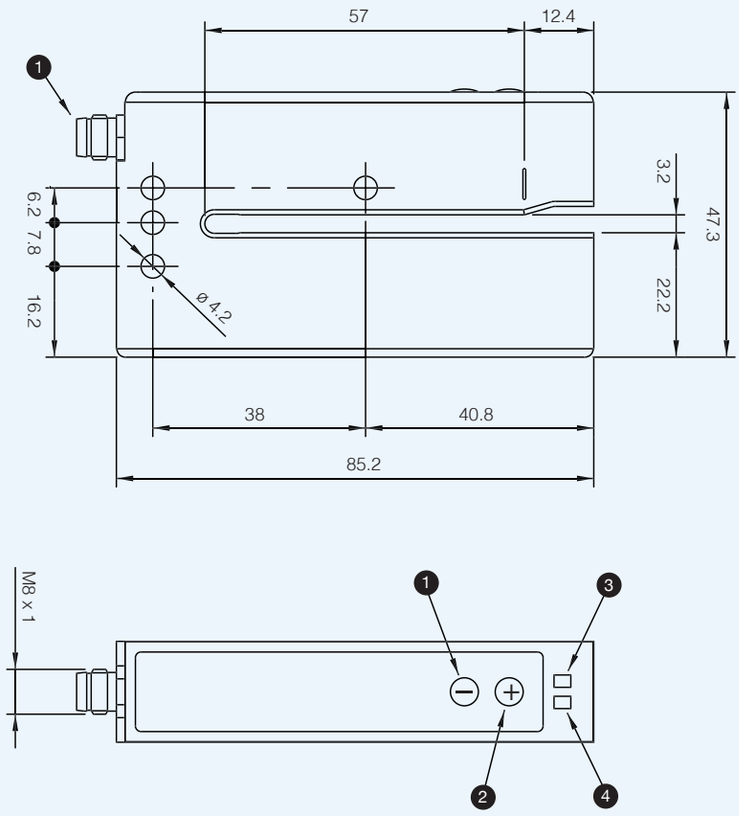

1. button -
2. button +
3. yellow LED, “ON” when the outputs are set to 1 (run)
4. red LED: keyboard lock and regulation